PP PN16 BALL VALVES, STANDARD AND FROST-PROOF

B02-VPPHP-FT-001

Product data sheet · PN16 PP ball valves

Glass-fibre reinforced polypropylene ball valves, PN16, female / female from 1/2" to 4" and male / female from 1/2" to 2". Standard version and frost-proof version guaranteed to −30 °C.



Standard version



Frost-proof version

Technical data

Nominal pressure	PN16
Body	Glass-fibre reinforced polypropylene (PPGF)
Seat	PTFE
Connection	Female threaded / female threaded (F/F) or male / female (M/F)
F/F sizes	1/2", 3/4", 1", 1" 1/4, 1" 1/2, 2", 2" 1/2, 3" and 4"
M/F sizes	1/2", 3/4", 1", 1" 1/4, 1" 1/2 and 2"
Standards	ISO 9393-1:2004, ISO 9393-2:2006, UNI EN 10226-1 and -2:2006
Frost-proof version	Guaranteed to −30 °C

Description

PP PN16 ball valves are available with two types of connection:

- **female / female (F/F)**, female threaded at both ends, from 1/2" to 4";
- **male / female (M/F)**, from 1/2" to 2".

Two versions are available:

- **standard version**;
- **frost-proof version**, guaranteed down to −30 °C.

The body is made of glass-fibre reinforced polypropylene and the seat of PTFE, which seals the ball.

Dimensions

The cross-section shows a female / female valve.

PP PN16 BALL VALVES, STANDARD AND FROST-PROOF

B02-VPPHP-FT-001

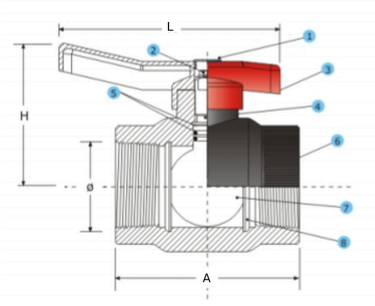

Cross-section: components and dimensions

Codes and dimensions

Code	Connection	Inlet / outlet	A (mm)	L (mm)	H (mm)
Standard version					
VPPHP-FFST-0012	F/F	1/2"	68.5	85	51.5
VPPHP-FFST-0034	F/F	3/4"	78	108	58
VPPHP-FFST-0100	F/F	1"	92.5	108	70
VPPHP-FFST-0114	F/F	1" 1/4	108		75
VPPHP-FFST-0112	F/F	1" 1/2	117	150	101
VPPHP-FFST-0200	F/F	2"	136	150	106
VPPHP-FFST-0212	F/F	2" 1/2	158.5	150	140
VPPHP-FFST-0300	F/F	3"	200	305	150
VPPHP-FFST-0400	F/F	4"			165
VPPHP-MFST-0012	M/F	1/2"			
VPPHP-MFST-0034	M/F	3/4"			
VPPHP-MFST-0100	M/F	1"			
VPPHP-MFST-0114	M/F	1" 1/4			
VPPHP-MFST-0112	M/F	1" 1/2			
VPPHP-MFST-0200	M/F	2"			
Frost-proof version					
VPPHP-FFAG-0012	F/F	1/2"	67.5		51.5
VPPHP-FFAG-0034	F/F	3/4"	77.5		58
VPPHP-FFAG-0100	F/F	1"	91.5		70
VPPHP-FFAG-0114	F/F	1" 1/4	100.5		75
VPPHP-FFAG-0112	F/F	1" 1/2	116		101
VPPHP-FFAG-0200	F/F	2"	134.5		106
VPPHP-FFAG-0212	F/F	2" 1/2	157.5		140
VPPHP-FFAG-0300	F/F	3"	199.5		150
VPPHP-FFAG-0400	F/F	4"	224		165
VPPHP-MFAG-0012	M/F	1/2"			
VPPHP-MFAG-0034	M/F	3/4"			

Code	Connection	Inlet / outlet	A (mm)	L (mm)	H (mm)
VPPHP-MFAG-0100	M/F	1"			
VPPHP-MFAG-0114	M/F	1" 1/4			
VPPHP-MFAG-0112	M/F	1" 1/2			
VPPHP-MFAG-0200	M/F	2"			

Components (item numbers on the cross-section):

Components

No.	Description
1	PPGF end cap
2	Steel screw
3	PAGF handle
4	Brass stem
5	NBR seal
6	PPGF body
7	Brass ball
8	PTFE seal

Performance

Each version undergoes the following quality control tests.

Quality control tests

Description	Standard version	Frost-proof version
Raw materials	●	●
Appearance	●	●
Geometrical characteristics	●	●
Resistance to internal pressure (1 h at 20 °C and 1,000 h at 95 °C)	●	
Resistance to internal pressure at −30 °C		●
Resistance to rapid cooling		●
Operation	●	●

Product codes : VPPHP-FFST-0012, VPPHP-FFST-0034, VPPHP-FFST-0100, VPPHP-FFST-0114, VPPHP-FFST-0112, VPPHP-FFST-0200, VPPHP-FFST-0212, VPPHP-FFST-0300, VPPHP-FFST-0400, VPPHP-FFAG-0012, VPPHP-FFAG-0034, VPPHP-FFAG-0100, VPPHP-FFAG-0114, VPPHP-FFAG-0112, VPPHP-FFAG-0200, VPPHP-FFAG-0212, VPPHP-FFAG-0300, VPPHP-FFAG-0400, VPPHP-MFST-0012, VPPHP-MFST-0034, VPPHP-MFST-0100, VPPHP-MFST-0114, VPPHP-MFST-0112, VPPHP-MFST-0200, VPPHP-MFAG-0012, VPPHP-MFAG-0034, VPPHP-MFAG-0100, VPPHP-MFAG-0114, VPPHP-MFAG-0112, VPPHP-MFAG-0200