VERTICAL PE STORAGE TANKS

D01-VER-FT-001

Product data sheet · PE tanks

Closed vertical storage tanks in food-grade, UV-stabilised polyethylene (PE), from 1,250 L to 10,000 L, with a top section reinforced to take mixers and dosing pumps. Can be supplied with a spill bund.



Technical data

Capacities	1,250 L to 10,000 L
Material	UV-stabilised PE, food grade
Standard colour	Natural PE (other colours on request)
Cap	Female-threaded screw cap, in food-grade PE
Top section	Reinforced for mixers and dosing pumps
Density of the stored product	Models for density 1, 1.4 or 1.9
Level	Graduated scale for level monitoring
Chemical compatibility	Chart on request
Containment	Spill bund on request

Description

Vertical storage tanks are closed tanks in food-grade, UV-stabilised PE, from 1,250 L to 10,000 L. They are closed by a food-grade PE screw cap. Depending on the capacity, the lid is centred or off-centre (see the dimensions table).

The top section is reinforced to take a mixer or a dosing pump. A graduated scale allows the liquid level to be monitored.

The standard colour is natural PE; other colours are available on request. Models are available for storing products with a density of 1, 1.4 or 1.9. A chemical compatibility chart is supplied on request.

Dimensions

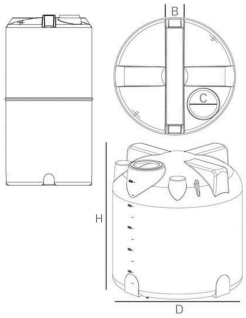

Storage tank dimensions: front view, top view and perspective view

Dimensions and capacities

Code	Capacity (L)	D (mm)	H (mm)	B (mm)	C (mm)	Lid position
VER-01250	1250	1005	1745	200	400	Centred
VER-02000	2000	1340	1760	240	500	Centred
VER-03000	3000	1520	1940	250	500	Off-centre

Code	Capacity (L)	D (mm)	H (mm)	B (mm)	C (mm)	Lid position
VER-05000	5000	2000	1925	270	500	Off-centre
VER-10000	10,000	2460	2420	400	500	Off-centre

Containment

All storage tanks can be supplied with a spill bund (see D01-VER-FT-002). The space between the storage tank and the bund allows accessories to be installed, for example a leak detector connected to an alarm.

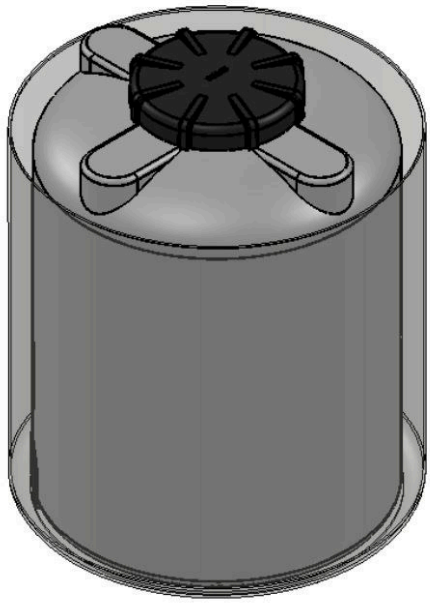

Storage tank in its spill bund

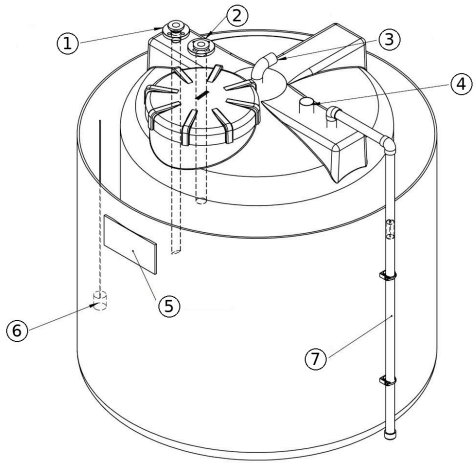

Example of an equipped storage tank

1. Outlet connection port
2. Filling connection port
3. Vent
4. High-level switch
5. Rating plate
6. Leak detector
7. Level indicator

Related documents : D01-VER-FT-002

Product codes : VER-01250, VER-02000, VER-03000, VER-05000, VER-10000