VERTICAL PE STORAGE TANKS WITH SPILL BUND

D01-VER-FT-002

Product data sheet · PE tanks

Vertical storage tanks in food-grade, UV-stabilised polyethylene (PE), supplied in a spill bund, with a top section reinforced to take mixers and dosing pumps.

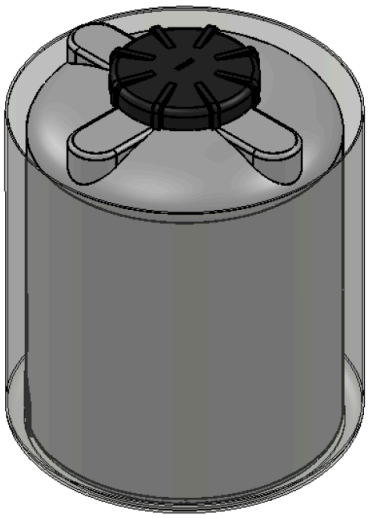

Technical data

Material	UV-stabilised PE, food grade
Standard colour	Natural PE (other colours on request)
Cap	Female-threaded screw cap, in food-grade PE
Top section	Reinforced for mixers and dosing pumps
Level	Graduated scale for level monitoring
Chemical compatibility	Chart on request

Description

The vertical storage tank in food-grade, UV-stabilised PE is supplied standing in a spill bund. It is closed by a food-grade PE screw cap.

The top section is reinforced to take a mixer or a dosing pump. A graduated scale allows the liquid level to be monitored.

The standard colour is natural PE; other colours are available on request. A chemical compatibility chart is supplied on request.

The specifications of the storage tank alone are given in data sheet D01-VER-FT-001.

Dimensions

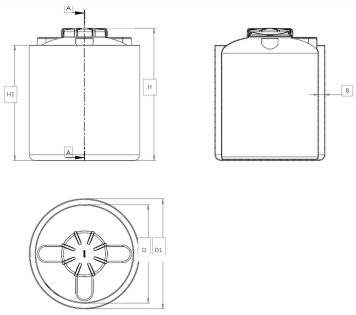

Dimensioned drawing: front view, section A-A and top view

Dimensions of the model shown

Capacity (L)	D (mm)	D1 (mm)	H (mm)	H1 (mm)	B (mm)
	1360	1520	1825	1590	80

Related documents : D01-VER-FT-001