LEVEL MANAGEMENT KITS FOR FLEXIBLE TANKS

Product data sheet · Flexible tanks and reservoirs

Float switches for flexible tanks, in two versions, low level and high level, mounted on the central cap welded onto the tank. Both versions can be fitted to the same tank.

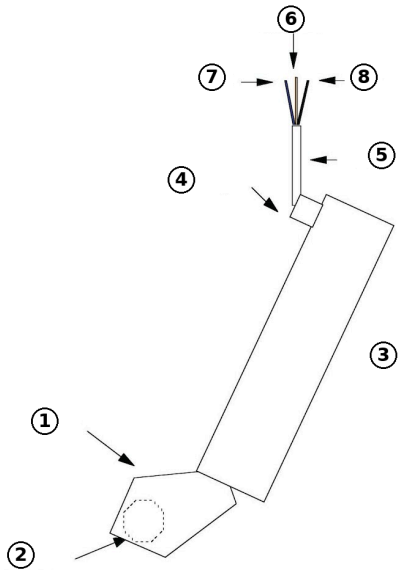

Technical data

Versions	Low level (switch resting on the bottom) and high level (switch in the liquid)
Mounting	Central cap welded onto the tank
Body	Stainless steel tube
Low-level contact	Brown and black wires, contact open when the tank is empty
High-level contact	Brown and blue wires, contact open at high level

Description

The level management kits control equipment according to the water level in the flexible tank, for example the opening and closing of the filling valves or drain valves. Each kit is a float switch made up of a stainless steel tube, a float and a switching contact, connected by a three-wire electrical cable.

There are two versions. They are mounted on the central cap welded onto the tank and can be installed together on the same tank.

1. Float
2. Switching contact
3. Stainless steel tube
4. Cable gland
5. Electrical cable
6. Brown wire
7. Blue wire
8. Black wire

Use

Low-level management

The switch rests on the bottom of the tank. The contact between the brown and black wires opens when the tank is empty.

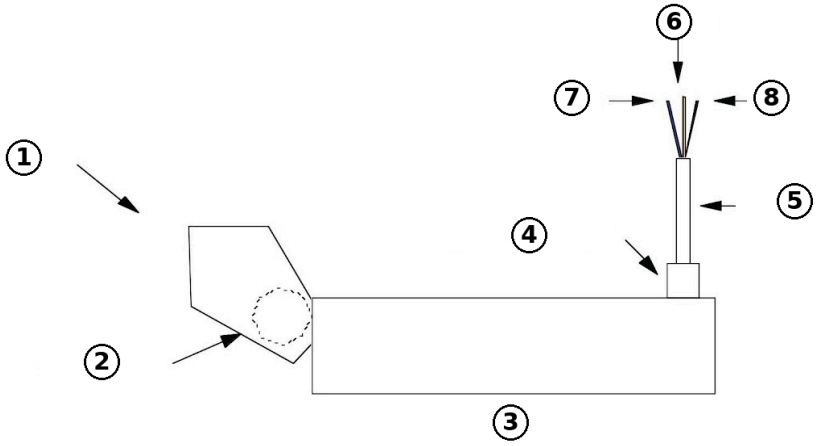

Low-level switch, resting on the bottom

High-level management

The switch is placed in the liquid. The contact between the brown and blue wires opens when the tank reaches its high level.

Related documents : D04-CIT-FT-001