PN10 PLASTIC HYDROCYCLONE DISC FILTER

F01-DISQUE-FT-001

Product data sheet · Plastic filters

PN10 plastic disc filter with hydrocyclone effect, in 2", 2" super and 3" sizes, with one inlet and two outlets. Flow rate from 5 to 52 m³/h depending on the size and the position of the adjusting ring.



2" filter | 2" super filter | 3" filter

Technical data

Maximum working pressure	10 bar (PN10)
Standard	ISO 9912
Body and filter elements	Polypropylene carbonate (PPC), UV- and deformation-resistant
Clamp	Stainless steel
Connection	BSP male threaded (NPT and grooved on request)
Sizes	2", 2" super and 3"
Disc cartridge	120 mesh (125 µm) or 155 mesh (100 µm)

Description

The PN10 hydrocyclone disc filter is a plastic filter with a disc cartridge that combines filtration with a hydrocyclone effect. It is available in three sizes: 2", 2" super and 3".

The filter has one inlet and two outlets: it can be installed in line or at an angle.

Specifications by model

Code	Inlet / outlet	Filtration area (cm²)	Mesh	Filtration grade (µm)	PN (bar)
3396-0126	2"	817	120	125	10
3396-0156	2"	817	155	100	10
3396-5126	2" super	1635	120	125	10
3396-5156	2" super	1635	155	100	10
3396-0128	3"	1755	120	125	10
3396-0158	3"	1755	155	100	10

Operation

As it enters the filter, the water follows an internal spiral that makes it rotate around the disc cartridge. This continuous circular movement keeps sand and mineral particles away from the cartridge, so that more of its filtering surface remains available.

The adjusting ring sets the water velocity according to the flow rate, to maintain the hydrocyclone effect over the whole flow rate range of the filter.

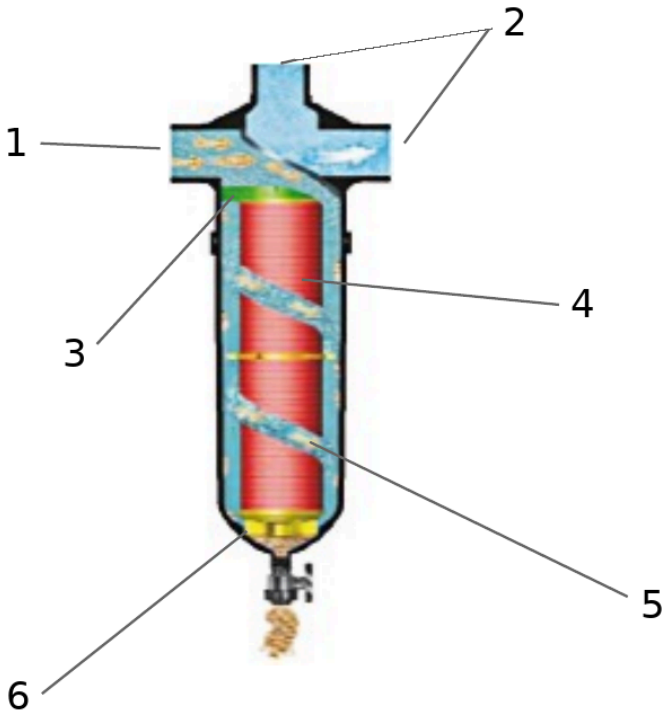

Filter operation

1. Inlet
2. Outlets
3. Adjusting ring
4. Disc filter cartridge
5. Hydrocyclone effect
6. Drain valve

Performance

Set the adjusting ring to the position that corresponds to the flow rate of the installation.

Filtration flow rate according to the adjusting ring position

Mesh	Filtration grade (µm)	Adjusting ring position	Min. flow rate (m^3/h)	Max. flow rate (m^3/h)
2"				
120	125	1	5	18
120	125	2	18	24
120	125	3	24	30
120	125	4	30	35
155	100	1	5	17
155	100	2	17	23
155	100	3	23	28
155	100	4	28	33

PN10 PLASTIC HYDROCYCLONE DISC FILTER

F01-DISQUE-FT-001

Mesh	Filtration grade (µm)	Adjusting ring position	Min. flow rate (m^3/h)	Max. flow rate (m^3/h)
2" super				
120	125	1	5	18
120	125	2	18	24
120	125	3	24	30
120	125	4	30	35
155	100	1	5	17
155	100	2	17	23
155	100	3	23	28
155	100	4	28	33
3"				
120	125	1	10	19
120	125	2	19	28
120	125	3	28	40
120	125	4	40	52
155	100	1	10	18
155	100	2	18	27
155	100	3	27	38
155	100	4	38	50

Dimensions

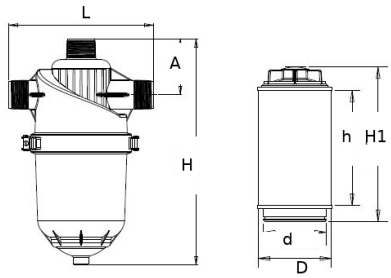

2" filter

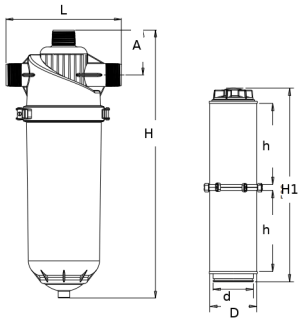

2" super filter

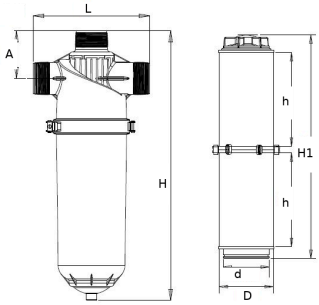

3" filter

Dimensions

Inlet / outlet	L (mm)	A (mm)	H (mm)	D (mm)	d (mm)	h (mm)	H1 (mm)
2"	300	117	472.5	127	108.8	205	269
2" super	300	117	690	127	108.8	200.7	500
3"	320	130	736.5	127	108.8	220	525.5

Related documents : F01-DISQUE-VE-001

Product codes : 3396-0126, 3396-0156, 3396-5126, 3396-5156, 3396-0128, 3396-0158