PN10 PLASTIC SCREEN FILTER

F01-TAMIS-FT-001

Product data sheet · Plastic filters

PN10 plastic filter with stainless steel screen, in 2", 2" super and 3", with one inlet and two outlets. Standard or hydrocyclone version, from 40 to 180 mesh.



Technical data

Maximum working pressure	10 bar (PN10)
Standard	ISO 9912
Body	Polypropylene carbonate (PPC), UV- and deformation-resistant
Filter element	Stainless steel screen on a PPC reinforcing structure
Clamp	Stainless steel
Connection	BSP male threaded (NPT and grooved on request)
Sizes	2", 2" super and 3"
Screen	40 mesh (400 µm) to 180 mesh (85 µm)

Description

The PN10 plastic screen filter has one inlet and two outlets: it can be installed in line or at an angle. It is available in three sizes: 2", 2" super and 3".

Two versions are available:

- **standard version**, with screen;
- **hydrocyclone version**, with screen and a system that sets the water in rotation.

1. Inlet
2. Outlets
3. Drain valve

Specifications by model

Inlet / outlet	Filtration area (cm^2)	Nominal flow rate (m^3/h)
Standard version		
2"	304	45
2" super	603	45
3"	654	55
Hydrocyclone version		
2"	304	40
2" super	603	40
3"	654	50

Codes and available screens

Code	Mesh	Filtration grade (µm)	Colour
Standard version – 2"			
3398-0046	40	400	blue
3398-0066	60	250	grey
3398-0086	80	200	black
3398-0126	120	125	red
3398-0150	150	100	brown
3398-0186	180	85	yellow
Standard version – 2" super			
3398-5046	40	400	blue
3398-5066	60	250	grey
3398-5086	80	200	black
3398-5126	120	125	red
3398-5156	150	100	brown
3398-5186	180	85	yellow
Standard version – 3"			
3398-0048	40	400	blue
3398-0068	60	250	grey
3398-0088	80	200	black
3398-0128	120	125	red
3398-0158	150	100	brown
3398-0188	180	85	yellow
Hydrocyclone version – 2"			
3407-0046	40	400	blue
3407-0066	60	250	grey
3407-0086	80	200	black
3407-0126	120	125	red
3407-0156	150	100	brown
3407-0186	180	85	yellow
Hydrocyclone version – 2" super			
3407-5046	40	400	blue
3407-5066	60	250	grey
3407-5086	80	200	black
3407-5126	120	125	red
3407-5156	150	100	brown
3407-5186	180	85	yellow
Hydrocyclone version – 3"			

PN10 PLASTIC SCREEN FILTER

F01-TAMIS-FT-001

Code	Mesh	Filtration grade (µm)	Colour
3407-0048	40	400	blue
3407-0068	60	250	grey
3407-0088	80	200	black
3407-0128	120	125	red
3407-0158	150	100	brown
3407-0188	180	85	yellow

Operation

In the hydrocyclone version, the water entering the filter follows an internal spiral and rotates around the screen before passing through it. This continuous circular movement keeps sand and mineral particles away from the screen, which improves filtration.

A water velocity regulator maintains the hydrocyclone effect over a wide range of flow rates.

Performance

Pressure loss (bar) as a function of flow rate (m^3/h).

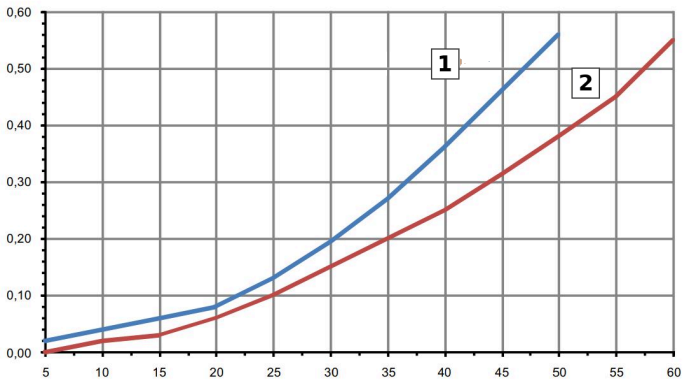

Standard version

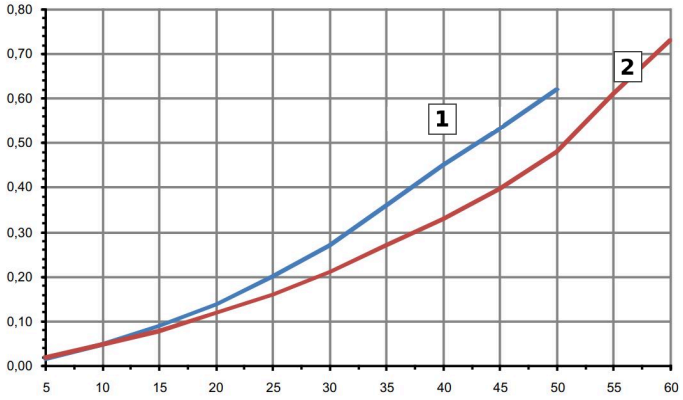

Hydrocyclone version

1. 2" and 2" super filters
2. 3" filter

PN10 PLASTIC SCREEN FILTER

F01-TAMIS-FT-001

Dimensions

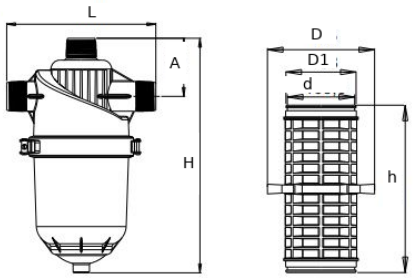

2" filter

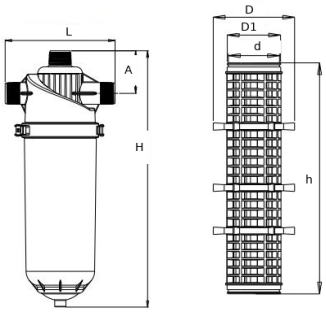

2" super filter

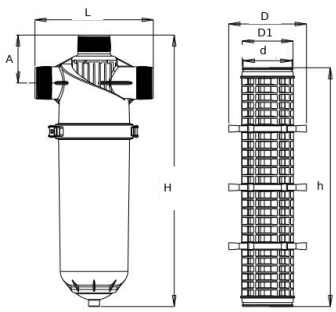

3" filter

Dimensions

Inlet / outlet	L (mm)	A (mm)	H (mm)	D (mm)	D1 (mm)	d (mm)	h (mm)
2"	300	117	472.5	165	108	103.6	258
2" super	300	117	690	165	108	103.6	480.6
3"	320	130	736.5	165	108	103.6	509

Related documents : F01-TAMIS-VE-001

Product codes : 3398-0046, 3398-0066, 3398-0086, 3398-0126, 3398-0150, 3398-0186, 3398-5046, 3398-5066, 3398-5086, 3398-5126, 3398-5156, 3398-5186, 3398-0048, 3398-0068, 3398-0088, 3398-0128, 3398-0158, 3398-0188, 3407-0046, 3407-0066, 3407-0086, 3407-0126, 3407-0156, 3407-0186, 3407-5046, 3407-5066, 3407-5086, 3407-5126, 3407-5156, 3407-5186, 3407-0048, 3407-0068, 3407-0088, 3407-0128, 3407-0158, 3407-0188