BAG SERIES BAG FILTERS

F03-BAG-FT-001

Product data sheet · Metal and automatic filters

Stainless steel bag filters, from DN 50 to DN 200, with 1 to 8 bags. They retain suspended solids (silt, sand, dirt). Nominal flow rate from 36 to 288 m³/h, 10 bar.



Technical data

Body	Stainless steel AISI 304 (painted S235JR steel on request)
Bags	Hydrophobic polypropylene microfibre
Seals	EPDM
Maximum working pressure	10 bar
Connections	Flanged

Description

BAG series filters retain the suspended solids (silt, sand, dirt) contained in water. The filter bags are placed in support baskets inside the pressure vessel.

Inexpensive to buy, these filters tolerate a wide range of operating conditions.

Specifications by model

Code	Inlet / outlet	Number of bags	Nominal flow rate (m³/h)	PN (bar)
05-25-050	DN 50	1	36	10
05-25-030	DN 100	3	108	10
05-25-040	DN 150	6	216	10
05-25-200	DN 200	8	288	10

Applications

- groundwater;
- surface water;
- food and beverage production;
- cooling tower water;
- industrial process water;
- pre-treatment before desalination;
- wastewater.

Dimensions

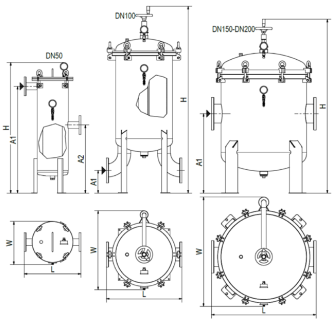

Dimensions A1, A2, H, W and L

Dimensions and weight

Code	Inlet / outlet	A1 (mm)	A2 (mm)	H (mm)	W (mm)	L (mm)	Weight (kg)
05-25-050	DN 50	940	600	1149	378	500	65
05-25-030	DN 100	200		1644	695	665	120
05-25-040	DN 150	700		1530	961	920	230
05-25-200	DN 200	750		1614	1124	1200	315

A1 and A2: connection heights, see the drawing. Dimension A2 applies to the DN 50 model only.

Related documents : F03-BAG-VE-001

Product codes : 05-25-050, 05-25-030, 05-25-040, 05-25-200