BAG SERIES BAG FILTERS – EXPLODED VIEW

F03-BAG-VE-001

Exploded view · Metal and automatic filters

Exploded view and part names for BAG series bag filters.

Exploded view

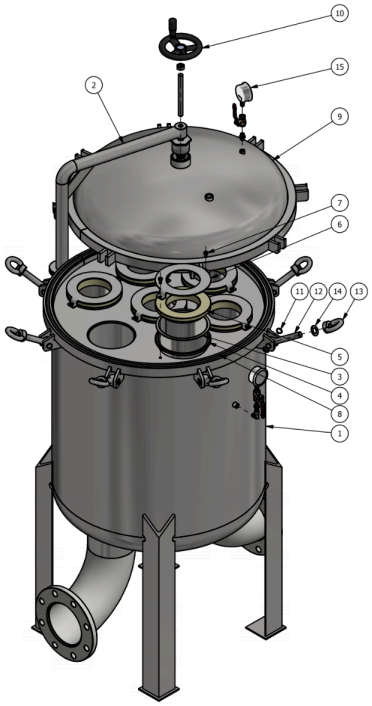

BAG series bag filter

Spare parts

The item numbers refer to the exploded view. The part codes are not yet available.

Parts

No.	Description
1	Filter body
2	Lifting arm
3	Retaining basket
4	Bag seal
5	Basket adapter
6	Retaining ring
7	Socket head cap screw DIN 6912 – M8 × 16
8	Lid O-ring
9	Lid
10	Handwheel
11	Shaft circlip DIN 471 – 18 × 1.2
12	Eye bolt DIN 444 – A – M20 × 130
13	Eye nut DIN 582 – M20 × 2

BAG SERIES BAG FILTERS – EXPLODED VIEW

F03-BAG-VE-001

No.	Description
14	Washer DIN 125 – A 21
15	Glycerine-filled stainless steel pressure gauge 0 to 16 bar

Related documents : F03-BAG-FT-001