BSF SERIES SCREEN PRE-FILTERS

F03-BSF-FT-001

Product data sheet · Metal and automatic filters

Steel basket pre-filters, from DN 100 to DN 300, flanged. They retain coarse sediment upstream of pumps, valves and finer filters. Nominal flow rate from 100 to 620 m³/h, 10 bar (16 bar on request).

Technical data



Body	S235JR steel (stainless steel AISI 304 or 316 on request)
Basket	Stainless steel perforated sheet, perforations from 1 to 4 mm (1,000 to 4,000 µm)
Seals	EPDM
Surface treatment	Pickling, phosphating and polyester powder coating (epoxy coating suitable for drinking water on request)
Maximum working pressure	10 bar (16 bar on request)
Connections	DIN 2576 PN 10 flanges (other standards on request)

Description

BSF series pre-filters protect pumps, control valves and finer filtration systems against wear and clogging caused by coarse sediment. Their range of sizes covers a wide range of flow rates.

The water enters the filter, passes through the basket, where the particles are retained, and leaves filtered.

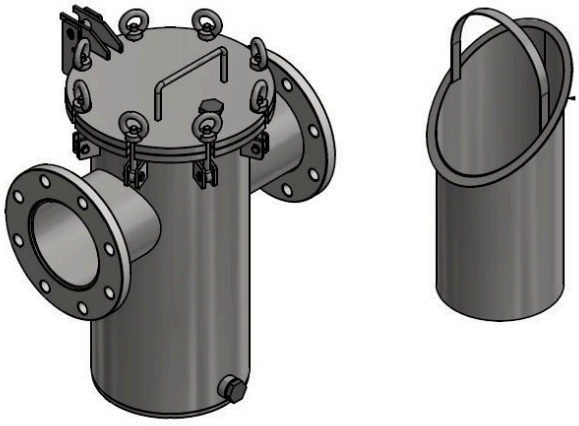

Body and basket

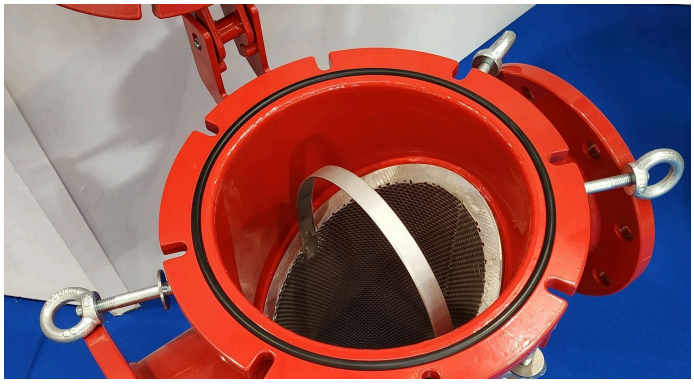

Basket in place, lid open

more information: www.aqua-tec.fr or contact@aqua-tec.fr

Performance

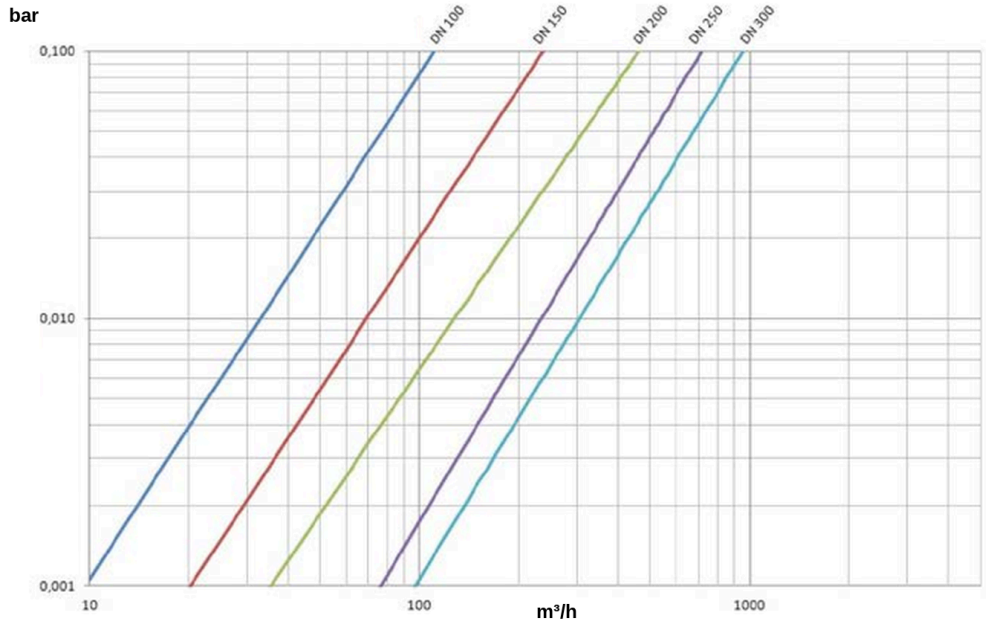

Pressure loss according to flow rate

Dimensions

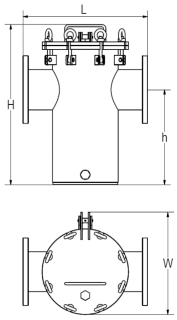

Dimensions L, H, h and W

Specifications and dimensions

Code	Inlet / outlet	Nominal flow rate (m³/h)	PN (bar)	L (mm)	H (mm)	h (mm)	W (mm)	Weight (kg)
05-14-100	DN 100 (4")	100	10	440	550	330	314	40
05-14-150	DN 150 (6")	200	10	520	675	400	430	63
05-14-200	DN 200 (8")	300	10	640	905	610	490	86
05-14-250	DN 250 (10")	420	10	700	809	445	640	141
05-14-300	DN 300 (12")	620	10	800	910	580	640	154

Other sizes are available on request.

Installation

Install the filter in the direction of the arrow shown on the body.

Maintenance

Cleaning is done by hand: remove the lid and take out the basket.

Clean the basket when the pressure loss is 0.5 bar higher than the pressure loss measured with a clean basket.

Product codes : 05-14-100, 05-14-150, 05-14-200, 05-14-250, 05-14-300