K SERIES SCREEN FILTER – EXPLODED VIEWS AND SPARE PARTS

F03-K-VE-001

Exploded view · Metal and automatic filters

Exploded views and spare part codes for K series screen filters, standard version (2" to 6") and brush version (2" to 6").

Exploded view

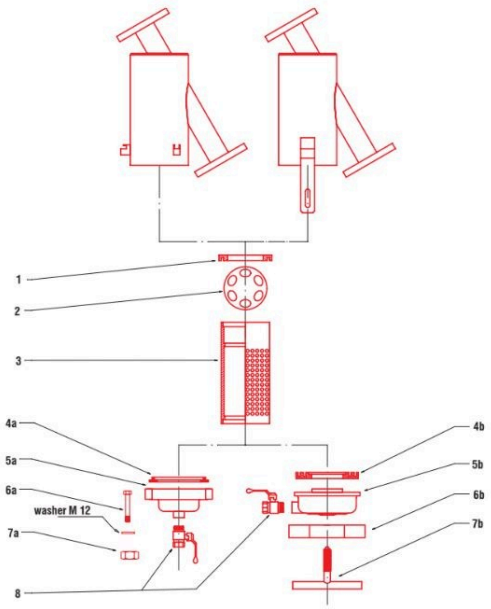

Standard version 2" to 3"

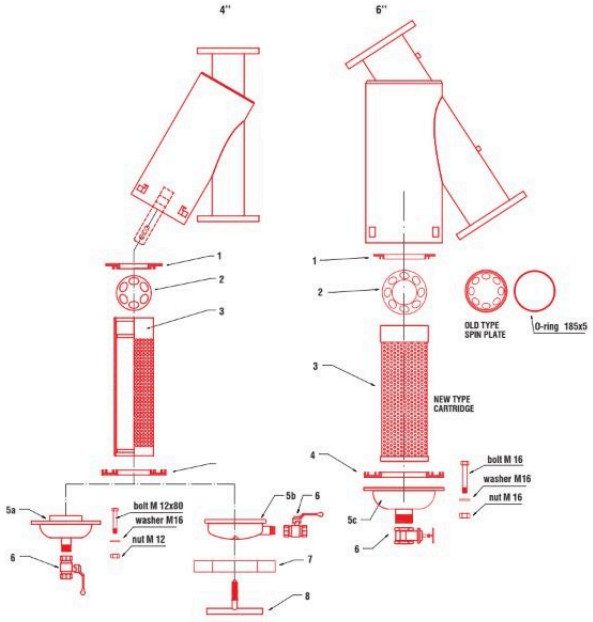

Standard version 4" to 6"

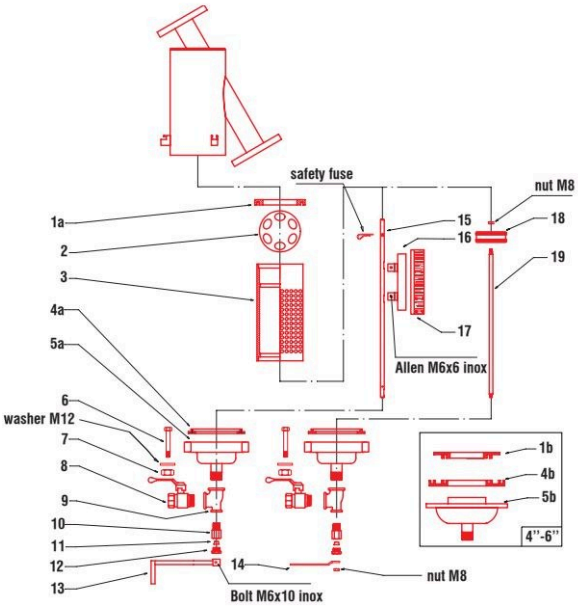

Brush version



Rotating brush filter

Spare parts

The item numbers refer to the exploded views. A dash indicates that the part does not exist for that model. For 2" to 4" brush filters, some parts are sold as a kit: the kit includes the item numbers shown.

K SERIES SCREEN FILTER – EXPLODED VIEWS AND SPARE PARTS

Standard version 2" to 3"

No.	Description	2"	2" 1/2	3"
1	Inner seal	02-02-006	02-02-006	02-02-006
2	Circulation plate	02-14-000	02-14-000	02-14-000
3	Cartridge	02-03-004	02-03-005	02-03-005
4a	Lid seal	02-02-024	02-02-024	02-02-024
4b	Lid seal	02-02-007	02-02-007	02-02-007
5a	Lid	02-01-040	02-01-040	02-01-040
5b	Lid	02-01-008	02-01-008	02-01-008
6a	M12 × 80 nut	02-10-119	02-10-119	02-10-119
6b	Closure tee	02-10-002	02-10-002	02-10-002
7a	M12 bolt	00-03-355	00-03-355	00-03-355
7b	Closure handle	02-10-100	02-10-100	02-10-100
8	Valve	02-04-106	02-04-106	02-04-106

Standard version 4" to 6"

No.	Description	4"	6"	6" super (750)	6" (990)
1	Inner seal	02-02-009	02-02-020	02-02-020	02-02-020
2	Circulation plate	02-14-001	02-14-002	02-14-002	02-14-002
3	Cartridge	02-03-006	02-03-007	02-03-007	02-03-007
4	Lid seal	02-02-008	02-02-019	02-02-019	02-02-019
5a	Lid	02-01-012	–	–	–
5b	Lid	02-01-007	–	–	–
5c	Lid	–	02-01-023	02-01-023	02-01-023
6	Valve	02-04-002	02-04-021	02-04-021	02-04-021
7	Closure	02-10-001	–	–	–
8	Closure handle	02-10-100	–	–	–

Brush version 2" to 6"

No.	Description	2"	2" 1/2	3"	4"	6"	6" super (750)	6" (990)
1a, 1b	Inner seal	02-02-006	02-02-006	02-02-006	02-02-009	02-02-020	02-02-020	02-02-020
2	Circulation plate	02-14-000	02-14-000	02-14-000	02-14-001	02-14-002	02-14-002	02-14-002
3	Cartridge	02-03-004	02-03-005	02-03-005	02-03-006	02-03-007	02-03-037	02-03-037
4a, 4b	Lid seal	02-02-024	02-02-024	02-02-024	02-02-008	02-02-019	02-02-019	02-02-019
5a, 5b	Lid	02-01-060	02-01-160	02-01-060	02-01-012	02-01-023	02-01-023	02-01-023
6	M12 × 80 – M16 × 100 nut	02-10-119	02-10-119	02-10-119	02-10-119	02-10-114	02-10-114	02-10-114
7	M12 – M16 nut	00-33-355	00-33-355	00-33-355	00-33-355	03-33-303	03-33-303	03-33-303
8	Valve	02-04-007	02-04-007	02-04-007	02-04-007	02-04-037	02-04-037	02-04-037
9	Tee	02-05-826	02-05-826	02-05-826	02-05-826	02-05-065	02-05-065	02-05-065

K SERIES SCREEN FILTER – EXPLODED VIEWS AND SPARE PARTS

No.	Description	2"	2" 1/2	3"	4"	6"	6" super (750)	6" (990)
10, 11, 12	Brass ring, conical seal and brass nut kit	02-13-049	02-13-049	02-13-049	02-13-049	–	–	–
10	Brass fitting	–	–	–	–	02-13-011	02-13-011	02-13-011
11	Conical seal	–	–	–	–	02-02-017	02-02-017	02-02-017
12	Brass nut	–	–	–	–	02-13-012	02-13-012	02-13-012
13	Brass handle (rotating brush)	02-13-014	02-13-014	02-13-014	02-13-014	–	–	–
14	Brass handle (“push & pull”)	02-13-013	02-13-013	02-13-013	02-13-013	–	–	–
15	Brush shaft and safety kit	02-13-048	02-13-051	02-13-051	02-13-053	–	–	–
15	Brass brush shaft	–	–	–	–	02-13-030	02-13-031	02-13-032
16, 17	Rotating brush and support kit	02-13-047	02-13-050	02-13-050	02-13-052	–	–	–
16	Brush support	–	–	–	–	02-08-103	02-08-103	02-08-103
17	Rotating brush	–	–	–	–	02-13-008	02-13-009	02-13-009
18	“Push & pull” brush	02-13-010	02-13-010	02-13-010	02-13-010	–	–	–
19	“Push & pull” brush shaft	02-13-001	02-13-002	02-13-002	02-13-003	–	–	–

Related documents : F03-K-FT-001