KE SERIES COMPACT FILTRATION STATIONS

F03-KE-FT-001

Product data sheet · Metal and automatic filters

Ready-to-connect stations, from 1" to 4", combining a hydrocyclone, an O or K series screen filter and a fertigation head. For borehole or well water with a high sand content, from 5 to 80 m³/h, up to 8 bar.



Technical data

Composition	Hydrocyclone, screen filter (O series, K series or K series with rotating brush) and fertigation head
Body	S235JR steel (AISI 304 or 316 stainless steel on request)
Cartridge	PVC-U frame (DIN 8061-8062), AISI 304 stainless steel screen
Seals	EPDM
Surface treatment	Pickling, phosphating and polyester powder coating (epoxy coating suitable for drinking water on request)
Maximum working pressure	8 bar
Connections	Female threaded BSP; grooved on request
Options	Automatic flush on request

Description

KE series compact filtration stations remove large quantities of mineral particles. They are mainly installed on borehole or well water.

Each station is supplied complete, ready to connect to the irrigation network. It includes:

- a hydrocyclone;
- an O series, K series or K series rotating brush screen filter;
- a complete fertigation head.

The loaded water enters the hydrocyclone. Centrifugal force throws the particles against the wall, where they spin at high speed and then fall into the collection chamber at the bottom of the hydrocyclone. Freed from the heaviest particles, the water then passes through the screen filter, which retains the finer and lighter particles.

With a fertiliser tank or a dosing pump, the fertigation head allows fertigation.

Specifications by model

Code	Inlet / outlet	Connection	Min. flow rate (m³/h)	Max. flow rate (m³/h)
With O series screen filter				
05-10-100	1"	TF	5	12
05-10-150	1" 1/2	TF	10	16
05-10-200	2"	TF	15	25
05-10-250	2" 1/2	TF	20	35

Code	Inlet / outlet	Connection	Min. flow rate (m^3/h)	Max. flow rate (m^3/h)
05-10-300	3"	TF	30	50
05-10-400	4"	TF	50	80
With K series screen filter				
05-10-201	2"	TF	15	25
05-10-253	2" 1/2	TF	20	35
05-10-303	3"	TF	30	50
05-10-404	4"	TF	50	80
With K series rotating brush screen filter				
05-10-203	2"	TF	15	25
05-10-255	2" 1/2	TF	20	35
05-10-307	3"	TF	30	50
05-10-407	4"	TF	50	80

Connection: TF = female threaded BSP. The filter screen is selected in the same way as for O and K series filters: see their data sheets.

Dimensions

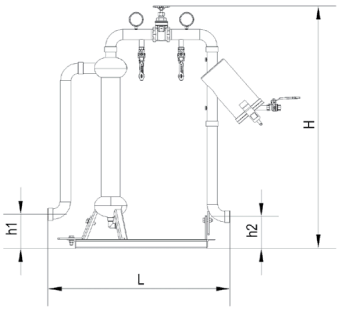

KE stations 1" and 1" 1/2

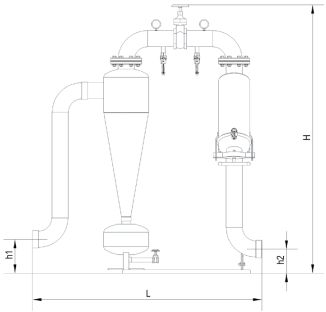

KE stations 2" to 4"

Dimensions and weight

Code	Inlet / outlet	L (mm)	H (mm)	h1 (mm)	h2 (mm)	Weight (kg)
With O series screen filter						
05-10-100	1"	685	825	185	155	24
05-10-150	1" 1/2	835	1120	155	145	30
05-10-200	2"	1110	1600	115	200	68
05-10-250	2" 1/2	1190	1655	145	185	81
05-10-300	3"	1230	1705	215	195	90
05-10-400	4"	1615	1900	240	172	138
With K series screen filter						
05-10-201	2"	1110	1600	115	200	69

Code	Inlet / outlet	L (mm)	H (mm)	h1 (mm)	h2 (mm)	Weight (kg)
05-10-253	2" 1/2	1190	1655	145	185	83
05-10-303	3"	1230	1705	215	195	90
05-10-404	4"	1615	1900	240	172	138
With K series rotating brush screen filter						
05-10-203	2"	1110	1600	115	200	67
05-10-255	2" 1/2	1190	1655	145	185	81
05-10-307	3"	1230	1705	215	195	88
05-10-407	4"	1615	1900	240	172	138

h1 and h2: heights of the inlet and outlet above the ground.

Maintenance

The particles collected at the bottom of the hydrocyclone are removed through the drain valve, manually or automatically with the automatic flush kit (on request).

To clean the screen filter, take out the cartridge and rinse it with a water jet or brush it. On stations fitted with a K series rotating brush filter, operating the brush cleans the cartridge without removing it from the body.

Related documents : F03-HYDRO-FT-001, F03-O-FT-001, F03-K-FT-001

Product codes : 05-10-100, 05-10-150, 05-10-200, 05-10-250, 05-10-300, 05-10-400, 05-10-201, 05-10-253, 05-10-303, 05-10-404, 05-10-203, 05-10-255, 05-10-307, 05-10-407