O SERIES HORIZONTAL SCREEN FILTERS

F03-O-FT-001

Product data sheet · Metal and automatic filters

Horizontal metal screen filters, from 1" to 8", for water with a low load of mineral particles. Used alone or as safety filtration after a sand filter or a hydrocyclone. Working pressure up to 8 bar.



Technical data

Body	S235JR steel (AISI 304 or 316 stainless steel on request)
Cartridge	PVC-U frame (DIN 8061-8062), AISI 304 stainless steel screen; stainless steel perforated sheet for 1" and 1" 1/2 models and from 6" upwards
Seals	EPDM
Surface treatment	Pickling, phosphating and polyester powder coating (epoxy coating suitable for drinking water on request)
Maximum working pressure	8 bar
Connections	Male threaded BSP (1" and 1" 1/2), female threaded BSP (2" to 4"), DIN 2576 PN10 flanges, grooved on request
Screen	40 mesh (470 µm), 50 mesh (400 µm), 60 mesh (320 µm), 80 mesh (220 µm), 120 mesh (140 µm), 140 mesh (115 µm), 160 mesh (90 µm) or 180 mesh (80 µm); 80 or 120 mesh only for 1", 1" 1/2 and 6" models; other grades on request

Description

O series filters are suitable for water with a low load of suspended mineral particles, such as sand. They are also used as a safety filter after a first filtration stage (sand filter, hydrocyclone): if that stage fails, they protect the downstream installation.

Water enters the filter, passes through the cartridge and leaves filtered. The particles remain on the cartridge screen.

Specifications by model

Code	Inlet / outlet	Connection	Filtration area (cm^2)	Min. flow rate (m^3/h)	Max. flow rate (m^3/h)	PN (bar)
05-00-102	1" long	TM	705	2	5	8
05-00-151	1" 1/2 long	TM	705	5	12	8
05-00-200	2"	TF, F, G	1115	15	30	8
05-00-250	2" 1/2	TF, F, G	1390	20	35	8
05-00-300	3"	TF, F, G	1700	25	40	8
05-00-400	4"	TF, F, G	1700	40	80	8
05-00-500	5"	F, G	3220	80	120	8
05-00-600	6"	F, G	3220	80	120	8

O SERIES HORIZONTAL SCREEN FILTERS

F03-O-FT-001

Code	Inlet / outlet	Connection	Filtration area (cm²)	Min. flow rate (m³/h)	Max. flow rate (m³/h)	PN (bar)
05-00-601	6" super (750)	F, G	4554	80	150	8
05-00-602	6" (990)	F, G	5730	80	180	8
05-00-802	8"	F, G	5730	80	220	8

Connection: TM = male threaded BSP, TF = female threaded BSP, F = DIN 2576 PN10 flanges, G = grooved (on request).

Performance

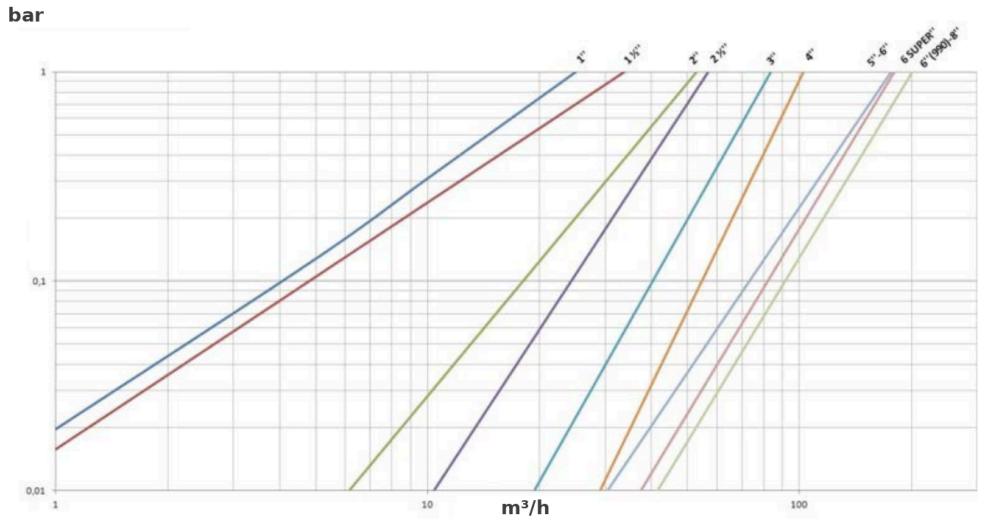

Pressure loss (bar) according to flow rate (m³/h), 120 mesh screen

Dimensions

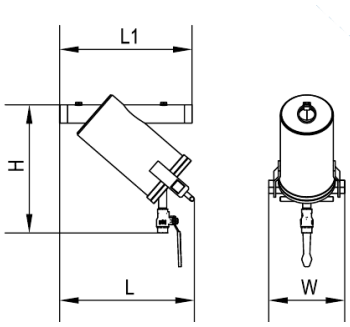

1" long and 1" 1/2 long filters

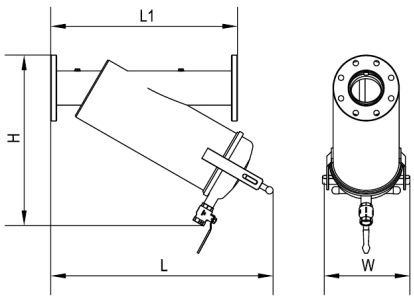

2" to 4" filters

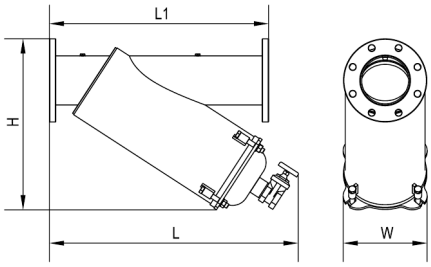

5" to 8" filters

Dimensions and weight

Code	Inlet / outlet	L1 (mm)	L (mm)	H (mm)	W (mm)	Weight (kg)
05-00-102	1" long	350	347	365	200	8.8
05-00-151	1" 1/2 long	350	349	365	200	9.1
05-00-200	2"	470	504	402	240	17.5
05-00-250	2" 1/2	500	580	454	240	20.5

Code	Inlet / outlet	L1 (mm)	L (mm)	H (mm)	W (mm)	Weight (kg)
05-00-300	3"	500	660	525	240	23.1
05-00-400	4"	620	738	570	290	33.0
05-00-500	5"	750	852	568	290	50.0
05-00-600	6"	750	852	586	287	54.5
05-00-601	6" super (750)	930	1004	684	287	64.2
05-00-602	6" (990)	930	1205	815	287	73.4
05-00-802	8"	930	1242	771	287	79.7

Installation

Install the filter in the direction of the arrow shown on the body.

Maintenance

Cleaning is manual: remove the lid, take out the cartridge and clean it.

Clean the cartridge when the pressure loss is 0.5 bar higher than that measured with a clean cartridge.

Product codes : 05-00-102, 05-00-151, 05-00-200, 05-00-250, 05-00-300, 05-00-400, 05-00-500, 05-00-600, 05-00-601, 05-00-602, 05-00-802