S SERIES SCREEN FILTERS

F03-S-FT-001

Product data sheet · Metal and automatic filters

Perforated cartridge filters, from 2" to 6", that protect sprinklers against coarse sediment. They are also used as a pre-filter for pumps and valves. Flow rate up to 150 m³/h, working pressure up to 10 bar.



Technical data

Body	S235JR steel (AISI 304 or 316 stainless steel on request)
Cartridge	PVC-U frame (DIN 8061-8062), AISI 304 stainless steel screen; stainless steel perforated sheet from 6" upwards
Cartridge perforations	Ø 1 mm (1,000 µm), Ø 1.5 mm (1,500 µm), Ø 2 mm (2,000 µm) or Ø 4 mm (4,000 µm)
Seals	EPDM
Surface treatment	Pickling, phosphating and polyester powder coating (epoxy coating suitable for drinking water on request)
Maximum working pressure	10 bar
Connections	Female threaded BSP (2" to 4"), DIN 2576 PN10 flanges, grooved on request

Description

S series filters protect the sprinklers of an irrigation network against wear and clogging caused by coarse sediment. They are also used as a pre-filter to protect pumps, valves and other equipment.

Water enters the filter, passes through the perforated cartridge and leaves filtered. The sediment remains in the cartridge. The diameter of the perforations determines the filtration grade.

Specifications by model (Ø 2 mm perforations)

Code	Inlet / outlet	Connection	Filtration area (cm²)	Max. flow rate (m³/h)	PN (bar)
05-04-050	2"	TF, F, G	785	25	10
05-04-052	3"	TF, F, G	1400	50	10
05-04-053	4"	TF, F, G	2130	80	10
05-04-090	5"	F, G	3200	150	10
05-04-055	6"	F, G	3200	150	10

Connection: TF = female threaded BSP, F = DIN 2576 PN10 flanges, G = grooved (on request).

The filters are also available with Ø 1 mm, Ø 1.5 mm and Ø 4 mm perforations.

Filters with Ø 1, 1.5 and 4 mm perforations have the same filtration area, the same dimensions and the same weight as the Ø 2 mm models.

Other perforations

Code	Inlet / outlet
Ø 1 mm perforations	
05-04-060	2"
05-04-061	3"
05-04-062	4"
05-04-088	5"
05-04-063	6"
Ø 1.5 mm perforations	
05-04-056	2"
05-04-057	3"
05-04-058	4"
05-04-089	5"
05-04-059	6"
Ø 4 mm perforations	
05-04-072	2"
05-04-073	3"
05-04-074	4"
05-04-091	5"
05-04-067	6"

Performance

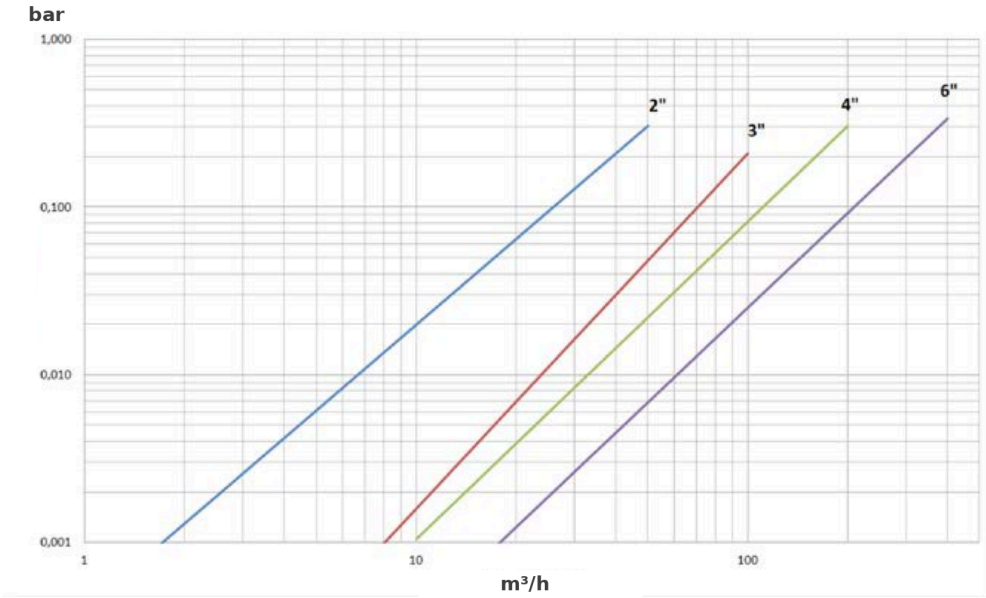

Pressure loss (bar) according to flow rate (m^3/h), Ø 2 mm perforations

Dimensions

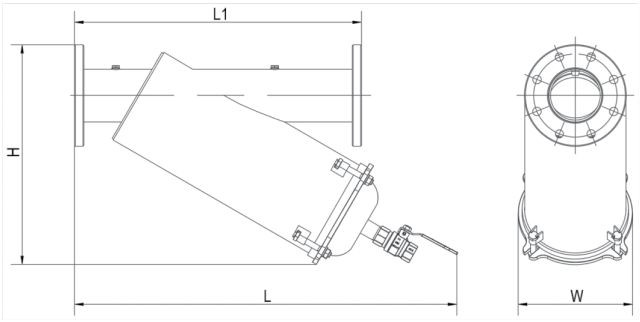

Dimensions L1, L, H and W

Dimensions and weight

Code	Inlet / outlet	L1 (mm)	L (mm)	W (mm)	H (mm)	Weight (kg)
05-04-050	2"	470	560	190	320	14.2
05-04-052	3"	500	690	190	420	19.2
05-04-053	4"	620	830	250	476	31.0
05-04-090	5"	750	830	285	580	53.0
05-04-055	6"	750	830	285	590	55.8

Installation

Install the filter in the direction of the arrow shown on the body.

Maintenance

Cleaning is manual: remove the lid, take out the cartridge and clean it.

Clean the cartridge when the pressure loss is 0.5 bar higher than that measured with a clean cartridge.

Product codes : 05-04-050, 05-04-052, 05-04-053, 05-04-090, 05-04-055, 05-04-060, 05-04-061, 05-04-062, 05-04-088, 05-04-063, 05-04-056, 05-04-057, 05-04-058, 05-04-089, 05-04-059, 05-04-072, 05-04-073, 05-04-074, 05-04-091, 05-04-067