SUF AND SUF-V SELF-CLEANING SCREEN FILTERS

Product data sheet · Metal and automatic filters

Automatic cleaning screen filters, vertical (SUF-V, 2" to 4") or parallel (SUF, 4" to 8"), for river water, lake water or wastewater. Filtration continues during cleaning. Working pressure from 2 to 10 bar.



SUF-V vertical filter



SUF parallel filter

Technical data

Body	S235JR steel (AISI 304 or 316 stainless steel on request)
Cartridge	AISI 304 stainless steel perforated sheet, AISI 316 stainless steel mesh and rigid PVC-U (DIN 8061-8062)
Seals	EPDM
Surface treatment	Pickling, phosphating and polyester powder coating (epoxy coating suitable for drinking water on request)
Working pressure	2 bar minimum, 10 bar maximum
Connections	DIN 2576 PN10 flanges; female threaded BSP for SUF-V 2"
Screen	60 mesh (250 µm), 80 mesh (200 µm), 120 mesh (110 µm), 160 mesh (80 µm), 200 mesh (55 µm) or 250 mesh (45 µm); other grades on request
Cleaning trigger	Differential pressure and/or regular intervals
SUF-E electric models	230 V AC power supply, 370 W motor, programmable logic controller (PLC) control

Description

SUF and SUF-V filters are automatic cleaning screen filters. They treat water from a variety of sources (river, lake, wastewater) for irrigation, industry and municipal networks.

Cleaning takes place without interrupting filtration: the installation remains continuously supplied. Suction nozzles, placed very close to the screen, sweep its entire inner surface through a combined rotating and linear movement. Cleaning is triggered by differential pressure, at regular intervals, or by both criteria.

The range includes three series:

- SUF-V, vertical filters from 2" to 4" (25 to 80 m^3/h);
- SUF, parallel filters from 4" to 8" (100 to 300 m^3/h), hydraulically controlled;
- SUF-E, parallel filters from 4" to 8" with electric motor.

Specifications by model

Code	Inlet / outlet	Connection	Filtration area (cm^2)	Nominal flow rate (m^3/h)	Backwash (m^3/h)
SUF-V, vertical					
05-11-201	2"	TF	780	25	15
05-11-301	3"	F	1450	40	20
05-11-401	4"	F	1450	80	20
SUF, parallel					
05-11-400	4"	F	5300	100	26
05-11-600	6"	F	7750	160	26
05-11-804	8" R2	F	10,600	300	26
SUF-E, parallel with electric motor					
05-11-402	4"	F	5300	100	26
05-11-602	6"	F	7750	160	26
05-11-805	8" R2	F	10,600	300	26

Connection: TF = female threaded BSP, F = DIN 2576 PN10 flanges. Other connections on request (ANSI flanges, NPT female thread, grooved).

Advantages

- Automatic screen cleaning, without intervention.
- Filtration not interrupted during cleaning.
- Short cleaning cycle: less than 30 seconds.
- Control of hydraulic models available in alternating current (AC) or direct current (DC).

Operation

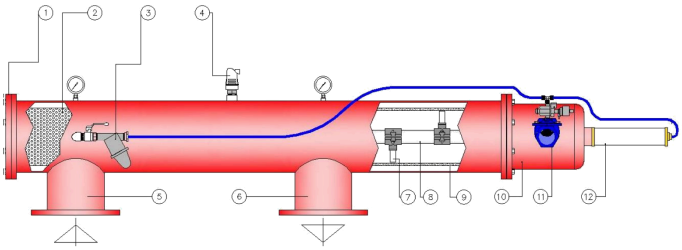

SUF filter

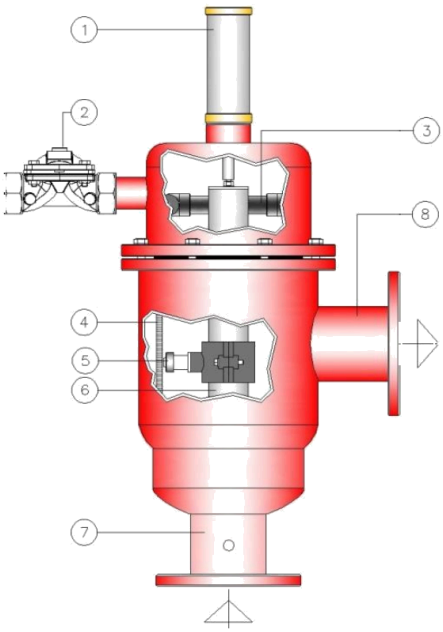

SUF-V filter

SUF filter:

1. Lid
2. Pre-filter
3. Pressure tap filter
4. Air valve
5. Inlet
6. Outlet
7. Suction nozzle
8. Rotation shaft
9. Filtration screen
10. Rotation chamber
11. 2" drain valve
12. Piston

SUF-V filter:

1. Piston
2. 1" 1/2 drain valve
3. Rotation chamber
4. Filtration screen
5. Suction nozzle
6. Rotation shaft

7. Inlet
8. Outlet

Performance

Pressure loss in clean water, with a 120 mesh (110 µm) cartridge.

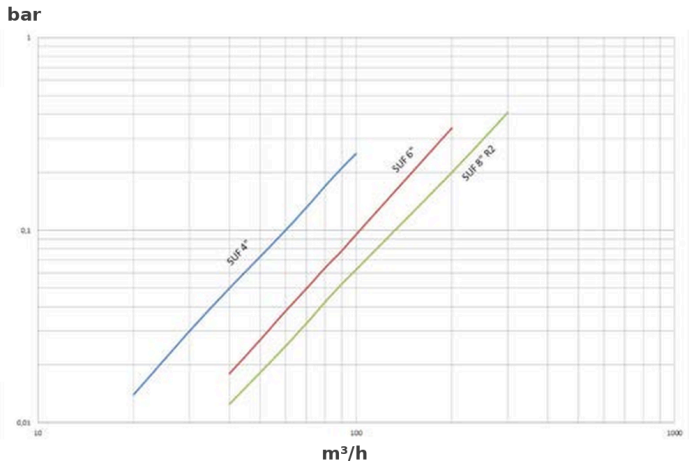

SUF filters: pressure loss (bar) according to flow rate (m³/h)

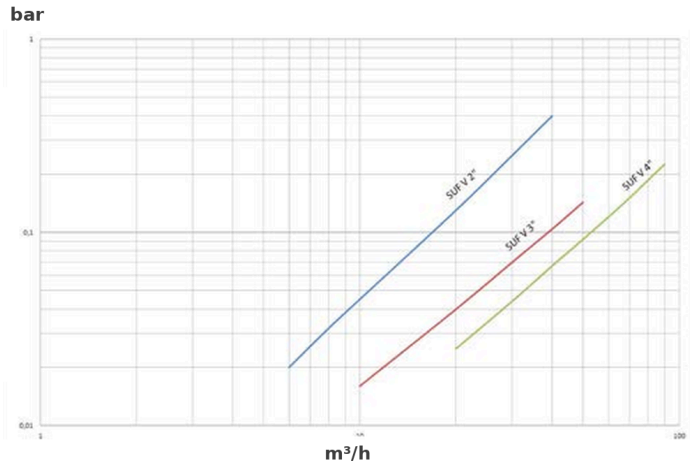

SUF-V filters: pressure loss (bar) according to flow rate (m³/h)

Dimensions

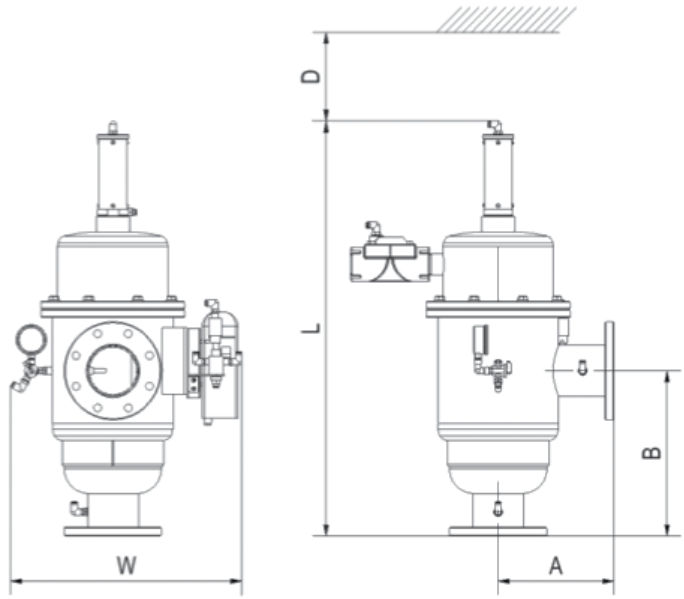

SUF-V filters

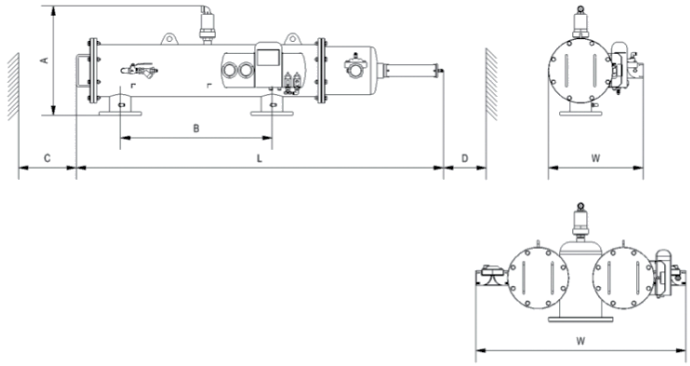

SUF filters

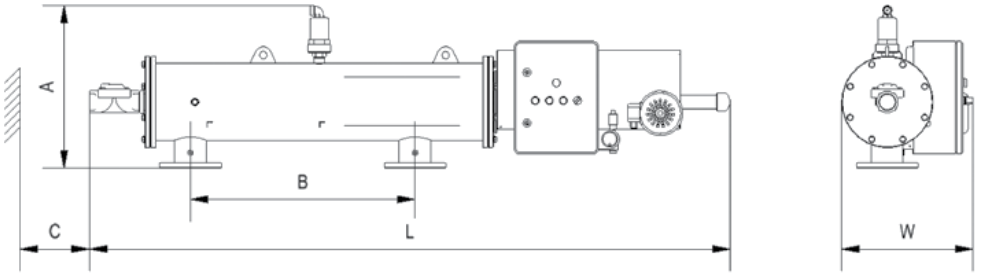

SUF-E filters

Dimensions and weight

Code	Inlet / outlet	L (mm)	A (mm)	B (mm)	C (mm)	D (mm)	W (mm)	Weight (kg)
SUF-V, vertical								
05-11-201	2"	795	200	280		510		48
05-11-301	3"	935	260	370		510		58
05-11-401	4"	950	260	370		510		60
SUF, parallel								
05-11-400	4"	1935	580	800	300	300	500	120
05-11-600	6"	2345	635	900	550	600	500	155
05-11-804	8" R2	1935	635	800	300	300	1110	240
SUF-E, parallel with electric motor								
05-11-402	4"	2280	580	800	200	200	470	165
05-11-602	6"	2680	635	900	450	500	470	200
05-11-805	8" R2	2280	635	800	200	200	950	320

C and D: minimum clearances required to open the filter. For the 8" R2, dimension W is given on the top view. Weights are for flanged models.

Installation



SUF filter installed

Allow clearances C and D so that the filter can be opened. The pressure at the filter inlet must remain between 2 and 10 bar.

Product codes : 05-11-201, 05-11-301, 05-11-401, 05-11-400, 05-11-600, 05-11-804, 05-11-402, 05-11-602, 05-11-805