# SY SERIES SCREEN FILTERS

**F03-SY-FT-001**

Product data sheet · Metal and automatic filters

Steel Y-type filters, from 2" to 12", to protect pumps and valves against coarse sediment. Working pressure up to 16 bar, nominal flow rate from 25 to 850 m³/h, perforated cartridge from 1 to 4 mm.




## Technical data

| | |
|---|---|
| **Body** | S235JR steel (AISI 304 or 316 stainless steel on request) |
| **Cartridge** | PVC-U (DIN 8061-8062), AISI 304 stainless steel screen, stainless steel perforated sheet |
| **Cartridge perforations** | Ø 1 mm (1,000 µm), 1.5 mm (1,500 µm), 2 mm (2,000 µm) or 4 mm (4,000 µm) |
| **Seals** | EPDM |
| **Surface treatment** | Pickling, phosphating and polyester powder coating (epoxy coating suitable for drinking water on request) |
| **Maximum working pressure** | 16 bar (PN16) |
| **Connections** | Male threaded BSP (2"), DIN 2576 PN 10/16 or DIN 2633 PN 16 flanges, grooved on request |

## Description

SY series filters protect irrigation network equipment (pumps, valves, etc.) against wear and clogging caused by coarse sediment. Their range of sizes covers a wide span of flow rates, up to 16 bar.

Water enters the filter, passes through the cartridge, where the particles are retained, and then leaves filtered.

The codes in the table correspond to a cartridge with Ø 1.5 mm perforations. Cartridges with Ø 1 mm, 2 mm or 4 mm perforations are also available.

### Specifications by model

| Code | Inlet / outlet | Connection | Filtration area (cm²) | Nominal flow rate (m³/h) | PN (bar) |
|---|---|---|---|---|---|
| 05-12-202 | 2" | TM, F, G | 410 | 25 | 16 |
| 05-12-302 | 3" | F, G | 620 | 45 | 16 |
| 05-12-402 | 4" | F, G | 820 | 80 | 16 |
| 05-12-502 | 5" | F, G | 1310 | 110 | 16 |
| 05-12-602 | 6" | F, G | 1700 | 160 | 16 |
| 05-12-802 | 8" | F, G | 2300 | 300 | 16 |
| 05-12-112 | 10" | F, G | 4230 | 600 | 16 |
| 05-12-122 | 12" | F, G | 5190 | 850 | 16 |

Connection: TM = male threaded BSP, F = DIN 2576 PN 10/16 or DIN 2633 PN 16 flanges, G = grooved (on request).

Other sizes are available on request.

## Other models (on request)

| Code | Inlet / outlet |
|---|---|
| 05-12-110 | 10" |
| 05-12-120 | 12" |
| 05-12-140 | 14" |
| 05-12-160 | 16" |

## Performance

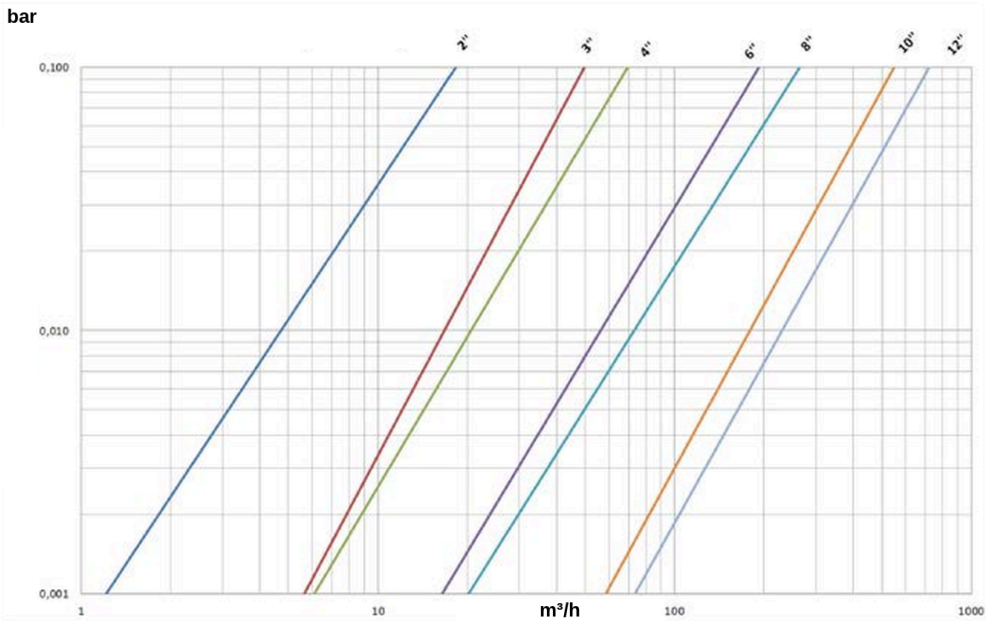


Pressure loss according to flow rate, Ø 1.5 mm cartridge

## Dimensions

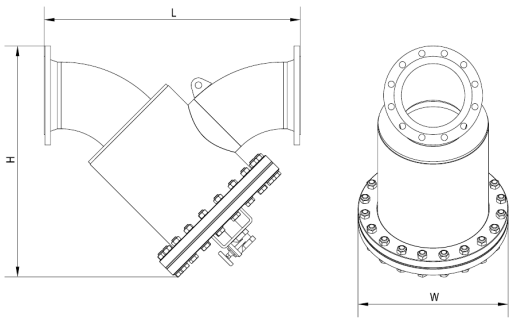


Dimensions H, L and W

### Dimensions and weight

| Code | Inlet / outlet | H (mm) | L (mm) | W (mm) | Weight (kg) |
|---|---|---|---|---|---|
| 05-12-202 | 2" | 370 | 300 | 180 | 14.0 |
| 05-12-302 | 3" | 400 | 360 | 200 | 17.5 |
| 05-12-402 | 4" | 455 | 390 | 220 | 21.0 |

# SY SERIES SCREEN FILTERS



| Code | Inlet / outlet | H (mm) | L (mm) | W (mm) | Weight (kg) |
|---|---|---|---|---|---|
| 05-12-502 | 5" | 570 | 510 | 250 | 32.5 |
| 05-12-602 | 6" | 570 | 590 | 300 | 48.0 |
| 05-12-802 | 8" | 740 | 745 | 445 | 112.0 |
| 05-12-112 | 10" | 945 | 1050 | 615 | 240.0 |
| 05-12-122 | 12" | 1065 | 1230 | 615 | 270.0 |

## Installation

Install the filter in the direction of the arrow shown on the body.

## Maintenance

Cleaning is manual: remove the lid and take out the cartridge.

Clean the cartridge when the pressure loss is 0.5 bar higher than that measured with a clean cartridge.

**Product codes :** 05-12-202, 05-12-302, 05-12-402, 05-12-502, 05-12-602, 05-12-802, 05-12-112, 05-12-122, 05-12-110, 05-12-120, 05-12-140, 05-12-160