X SERIES SAND FILTERS

F03-X-FT-001

Product data sheet · Metal and automatic filters

Steel sand filters from 1" to 4", single or double chamber, with or without backwashing bypass, and stations of 2 to 5 filters. They retain organic and mineral matter at high flow rates, up to 8 bar.



Single chamber filter



Double chamber filter

Technical data

Body	S235JR steel (AISI 304 or 316 stainless steel on request)
Maximum working pressure	8 bar (PN8)
Connections	Female threaded BSP (NPT on request), DIN flanges (ANSI on request), grooved on request
Filter media	Quartz sand
Seals	EPDM
Surface treatment	Pickling, phosphating and polyester powder coating (epoxy coating suitable for drinking water on request)
Models	Single chamber (12" to 48" tank) or double chamber (1" 1/2 to 4")
Backwashing	Manual (models with bypass) or automatic

Description

X series sand filters retain algae, organic matter and mineral particles (sand, gravel, silt). They are suitable for high flow rates, particularly in drip irrigation.

Water passes through the sand bed from top to bottom. Filtration takes place both on the surface and in the depth of the bed: particles remain trapped between the grains. To clean the filter, the water flow is reversed: backwashing lifts the sand and removes the accumulated particles.

The filters are available in single or double chamber versions. Models with a bypass are equipped for manual backwashing.

Applications

The filter media is crushed silica sand. Its grain size determines the filtration grade.

Filter media

Filter media	Mean effective size (mm)	Uniformity coefficient	Min. mesh	Max. mesh	Filtration grade (µm)
Crushed silica sand 1.2 to 2.4 mm	1.2	1.5	130	140	150
Crushed silica sand 0.4 to 0.8 mm	0.5	1.43	200	230	75

Install a screen filter at the outlet of the sand filter. It retains the last impurities and protects the downstream installation if the sand filter fails.

Performance

The recommended flow rate depends on the quality of the water to be filtered.

Flow rates according to water quality

Code	Inlet / outlet	Tank (Ø)	Filtration area (m^2)	Nominal flow rate (m^3/h)	River, dam (m^3/h)	Canal water (m^3/h)	Wastewater (m^3/h)
Single chamber filter, without bypass							
05-08-101	1"	12"	0.07	4.2	2.5	1.8	1.0
05-08-111	1"	16"	0.13	7.8	4.5	3.5	2.0
05-08-152	1" 1/2	18"	0.16	9.5	5.5	4.0	2.5
05-08-202	2"	20"	0.20	12.0	7.0	5.0	3.0
05-08-302	3"	24"	0.28	17.0	10.0	7.0	4.5
05-08-485	3"	30"	0.46	27.5	16.0	11.5	7.0
05-08-338	3"	36"	0.65	40.0	23.0	16.0	10.0
05-08-450	4"	48"	1.15	70.0	40.0	30.0	17.0
Single chamber filter, with bypass							
05-08-102	1"	12"	0.07	4.2	2.5	1.8	1.0
05-08-112	1"	16"	0.13	7.8	4.5	3.5	2.0
05-08-150	1" 1/2	18"	0.16	9.5	5.5	4.0	2.5
05-08-200	2"	20"	0.20	12.0	7.0	5.0	3.0
05-08-300	3"	24"	0.28	17.0	10.0	7.0	4.5
05-08-484	3"	30"	0.46	27.5	16.0	11.5	7.0
05-08-336	3"	36"	0.65	40.0	23.0	16.0	10.0
05-08-448	4"	48"	1.15	70.0	40.0	30.0	17.0
Double chamber filter, without bypass							
05-08-155	1" 1/2		0.40	24.0	14.0	10.0	6.0
05-08-212	2"	Ø 600 mm	0.75	45.0	26.0	18.0	11.0
05-08-488	3"	Ø 750 mm	1.10	66.0	38.5	27.5	16.5
05-08-472	4"	Ø 900 mm	1.60	96.0	56.0	40.0	24.0
Double chamber filter, with bypass							
05-08-156	1" 1/2		0.40	24.0	14.0	10.0	6.0
05-08-213	2"	Ø 600 mm	0.75	45.0	26.0	18.0	11.0
05-08-515	3"	Ø 750 mm	1.10	66.0	38.5	27.5	16.5
05-08-471	4"	Ø 900 mm	1.60	96.0	56.0	40.0	24.0

Pressure loss in clean water, with 1.2 to 2.4 mm sand. With finer sand, the pressure loss is higher.

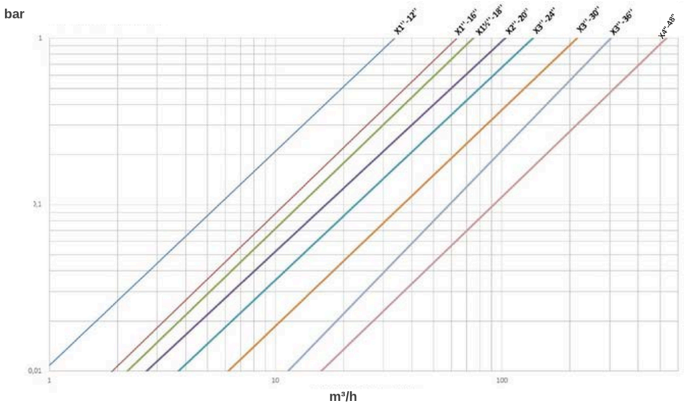

Single chamber filters: pressure loss (bar) according to flow rate (m³/h)

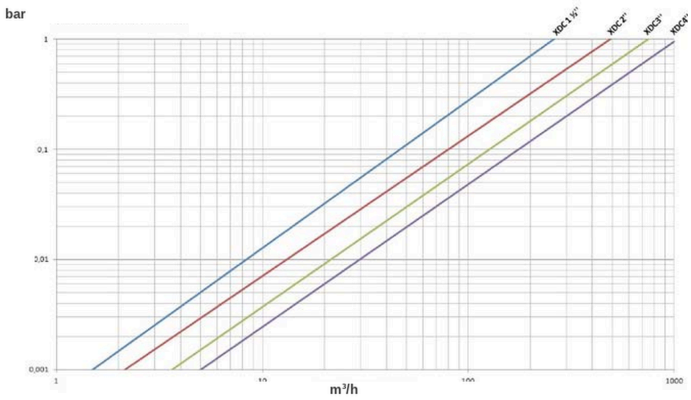

Double chamber filters: pressure loss (bar) according to flow rate (m³/h)

Dimensions

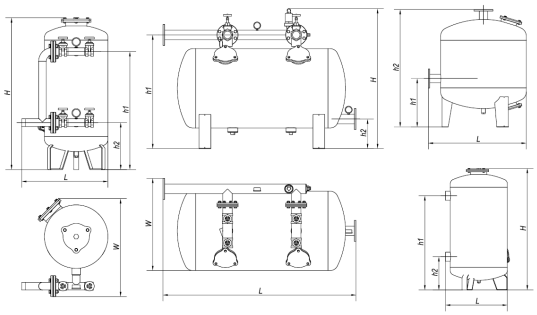

Dimensions H, h1, h2, L and W

Dimensions and quantity of media

Code	Inlet / outlet	Tank (Ø)	H (mm)	h1 (mm)	h2 (mm)	L (mm)	W (mm)	Tank volume (L)	Filter media (kg)	Media bags
Single chamber filter, without bypass										
05-08-101	1"	12"	900	690	220	370		50	50	2
05-08-111	1"	16"	1000	800	320	490		94	75	3
05-08-152	1" 1/2	18"	1015	810	330	541		119	100	4
05-08-202	2"	20"	1200	930	370	600		175	125	5
05-08-302	3"	24"	1230	990	350	665		284	225	9
05-08-485	3"	30"	1215	900	450	805		400	375	15
05-08-338	3"	36"	1200	840	510	955		505	450	18
05-08-450	4"	48"	1325	900	600	1250		971	825	33
Single chamber filter, with bypass										
05-08-102	1"	12"	900	690	220	506	521	50	48	2
05-08-112	1"	16"	1000	800	320	562	606	94	75	3
05-08-150	1" 1/2	18"	1015	810	330	613	723	119	100	4
05-08-200	2"	20"	1200	930	370	680	775	175	125	5
05-08-300	3"	24"	1230	990	350	793	861	284	225	9
05-08-484	3"	30"	1215	900	450	870	995	400	375	15

Code	Inlet / outlet	Tank (Ø)	H (mm)	h1 (mm)	h2 (mm)	L (mm)	W (mm)	Tank volume (L)	Filter media (kg)	Media bags
05-08-336	3"	36"	1200	840	510	945	1145	505	450	18
05-08-448	4"	48"	1325	900	600	1275	1662	971	825	33
Double chamber filter, with bypass										
05-08-156	1" 1/2		890	775	200	1190	695	182	175	7
05-08-213	2"	Ø 600 mm	1100	982	300	1690	700	410	300	12
05-08-515	3"	Ø 750 mm	1270	1075	280	1825	872	660	575	23
05-08-471	4"	Ø 900 mm	1435	1240	300	2105	957	1145	850	34

Sand filter stations

When the flow rate exceeds that of one filter, several filters are mounted in parallel. Each station includes the sand filters, an O series safety screen filter, the manifolds, the 3-way valves for backwashing and the hydraulic fittings. Automatic stations also include the control system.

The filters are cleaned one at a time, with filtered water from the outlet manifold. In the automatic version, backwashing is triggered by differential pressure or at regular intervals.

The stations are available in automatic or manual versions, with the same specifications. On the manual version, the backwashing valves are operated by hand. The table gives both codes.



Sand filter station

Sand filter stations

Code	Manual version code	Inlet / outlet	Media + screen filters	Number of units	Nominal flow rate (m^3/h)	River, dam (m^3/h)	Canal water (m^3/h)	Wastewater (m^3/h)
BX-20-201	BX-20-200	DN80	X 20" + O 3"	2 + 1	30	16	12	8
BX-20-301	BX-20-300	DN100	X 20" + O 4"	3 + 1	40	24	18	12
BX-24-201	BX-24-200	DN80	X 24" + O 3"	2 + 1	45	22	17	11
BX-24-301	BX-24-300	DN100	X 24" + O 4"	3 + 1	65	34	25	17
BX-36-201	BX-36-200	DN100	X 36" + O 4"	2 + 1	80	52	39	26
BX-36-301	BX-36-300	DN150	X 36" + O 6"	3 + 1	150	78	59	39
BX-36-401	BX-36-400	DN150	X 36" + O 6"	4 + 2	200	104	78	52
BX-36-501	BX-36-500	DN150	X 36" + O 6"	5 + 2	250	130	98	65
BX-48-201	BX-48-200	DN150	X 48" + O 6"	2 + 1	140	92	69	46
BX-48-301	BX-48-300	DN150	X 48" + O 6"	3 + 2	210	138	104	69

Code	Manual version code	Inlet / outlet	Media + screen filters	Number of units	Nominal flow rate (m^3/h)	River, dam (m^3/h)	Canal water (m^3/h)	Wastewater (m^3/h)
BX-48-401	BX-48-400	DN200	X 48" + O 6"	4 + 2	270	184	138	92
BX-48-501	BX-48-500	DN200	X 48" + O 6"	5 + 3	330	230	173	115

Automatic backwashing

Single chamber filters and some double chamber filters are available in an automatic backwashing version, on request.

Automatic backwashing versions (on request)

Code	Inlet / outlet	Tank (Ø)
Single chamber filter, without bypass		
05-08-121	1"	12"
05-08-161	1"	16"
05-08-151	1" 1/2	18"
05-08-201	2"	20"
05-08-301	3"	24"
05-08-486	3"	30"
05-08-337	3"	36"
05-08-449	4"	48"
Double chamber filter, without bypass		
05-08-153	1" 1/2	
05-08-215	2"	

Diffusers

Two types of diffuser are available:

- **Octopus**, fitted as standard. Its simpler construction reduces the cost of the filter.
- **Mushroom**, on request. Their layout distributes the water better and makes backwashing more uniform.



Octopus diffusers

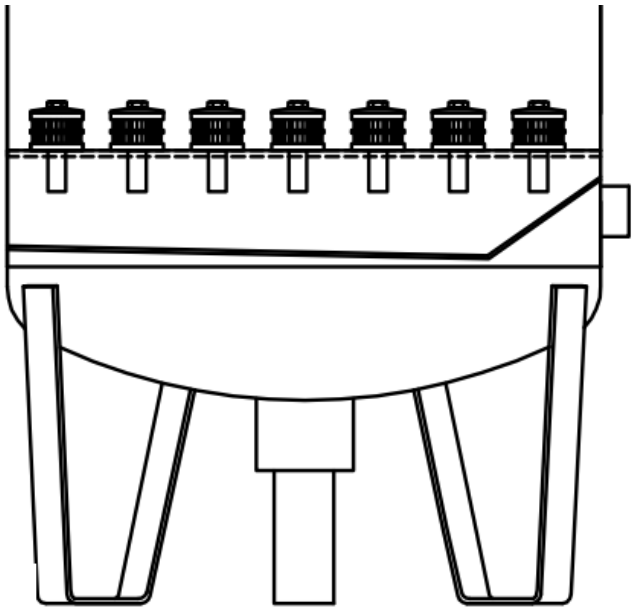

Mushroom diffusers

Flat-bottom double chambers fitted with mushroom diffusers are available on request.

Flat-bottom double chambers with mushroom diffusers (on request)

Code	Inlet / outlet	Tank (Ø)	Backwash
05-08-494	4"		
05-08-500			
05-08-459	5"	Ø 900 mm	Without bypass
05-08-458	5"	Ø 900 mm	Manual
05-08-496	5"	Ø 900 mm	Automatic

Related documents : F03-X-SC-001

Product codes : 05-08-101, 05-08-111, 05-08-152, 05-08-202, 05-08-302, 05-08-485, 05-08-338, 05-08-450, 05-08-102, 05-08-112, 05-08-150, 05-08-200, 05-08-300, 05-08-484, 05-08-336, 05-08-448, 05-08-155, 05-08-212, 05-08-488, 05-08-472, 05-08-156, 05-08-213, 05-08-515, 05-08-471, BX-20-201, BX-20-301, BX-24-201, BX-24-301, BX-36-201, BX-36-301, BX-36-401, BX-36-501, BX-48-201, BX-48-301, BX-48-401, BX-48-501, BX-20-200, BX-20-300, BX-24-200, BX-24-300, BX-36-200, BX-36-300, BX-36-400, BX-36-500, BX-48-200, BX-48-300, BX-48-400, BX-48-500, 05-08-121, 05-08-161, 05-08-151, 05-08-201, 05-08-301, 05-08-486, 05-08-337, 05-08-449, 05-08-153, 05-08-215, 05-08-494, 05-08-500, 05-08-459, 05-08-458, 05-08-496