INSTALLATION MANUAL AND OPERATING INSTRUCTIONS FOR MECAFLOW DOSING PUMPS

Manual · Mechanical dosing pumps

Installation, commissioning and maintenance of MecaFlow diaphragm dosing pumps. Mounting, electrical connection, oil filling, hydraulic connection, flow rate calibration, maintenance schedule, replacement diaphragms and oil, troubleshooting.



Technical data

Replacement oil	ISO VG 320 mineral oil (320 cSt at 40 °C or 23 °E at 50 °C)
Total suction length	2.5 m maximum
Suction lift	1.5 m maximum
Liquid velocity on the suction side	0.7 m/s maximum, for a viscosity up to 100 cP
Discharge pressure	At least 0.5 bar above the suction pressure
Clearance around the motor	30 cm minimum
Operating conditions of the standard motor	Ambient temperature up to 40 °C, altitude up to 1,000 m

Introduction

This manual covers the installation and use of MecaFlow diaphragm dosing pumps. Follow the steps in order and observe the safety instructions for each one. For any question, contact Aqua'Tec technical support.

The rating plate of the pump states its code, its flow rate at maximum pressure, its maximum pressure and its serial number. Models, flow rates and pressures: technical data sheet P02-MCF-FT-001 and curves P02-MCF-CO-001.



Main components

1. PTFE diaphragm
2. Return spring
3. Eccentric shaft
4. Stroke length adjuster

Pump coding

Example: D110-Q150-P8-T18-PI-038.

- **D110**: diaphragm diameter, 80, 110, 140 or 170 mm.
- **Q150**: maximum flow rate at maximum pressure, in L/h.
- **P8**: maximum pressure, in bar.
- **T18**: motor.
- T18: 0.18 kW, three-phase 230/400 Vac;
- T37: 0.37 kW, three-phase 230/400 Vac.
- **PI**: construction.
- PI: PP cylinder, stainless steel balls, stainless steel seat, FPM seals;
- FF: PVDF cylinder, PTFE balls, PVDF seat, PTFE seals;
- II: stainless steel cylinder, stainless steel balls, stainless steel seat, PTFE seals.
- **038**: connection.
- 014: 1/4" BSP;
- 038: 3/8" BSP;
- 034: 3/4" BSP;
- 100: 1" BSP.

For operation with a variable frequency drive, the motors can be supplied with forced ventilation. Other motor options, for example single-phase, are available on request.

Mounting the pump

Fix the pump on a sound and solid support, or on the stainless steel mounting plate, available as an option.

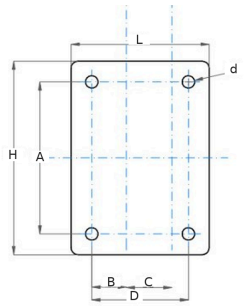

D80 and D110 plate

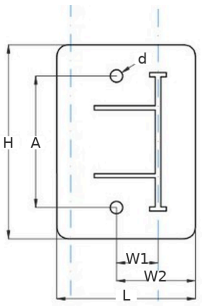

D140 and D170 plate

Mounting plate dimensions

L (mm)	H (mm)	A (mm)	B (mm)	C (mm)	D (mm)	W1 (mm)	W2 (mm)	d (mm)
D80 and D110 plate								
100	140	110	25	33	70			9
D140 and D170 plate								
100	140	95				30	57	9

d = diameter of the fixing holes.

Electrical connection

Preliminary checks

The standard motor is three-phase 230/400 V, 50/60 Hz, 0.18 kW (D80, D110) or 0.37 kW (D140, D170). Before connecting it, check that the mains voltage matches the motor plate: a different voltage damages the electrical components.

- Install in accordance with the applicable safety standards.
- Install the necessary motor protection, for example a thermal protection circuit breaker. Fuses alone do not protect the motor sufficiently.
- Leave at least 30 cm between the motor and walls or other objects, for cooling.
- Do not install a standard motor at an ambient temperature above 40 °C or at an altitude above 1,000 m. Under these conditions, an oversized motor is needed to compensate for the loss of performance.
- Check that the cable glands match the cable diameter and are properly tightened. Unsuitable or loose cable glands can damage the terminal box and the cables, and reduce the protection of the motor.
- Always connect the earth wire in the motor terminal box.
- On first start-up, check the direction of rotation: viewed from above, on the fan side, the motor must turn anticlockwise.

Three-phase motor

- 230 V three-phase supply: delta connection (Δ, on the left of the diagram).
- 400 V three-phase supply: star connection (Y, on the right of the diagram).

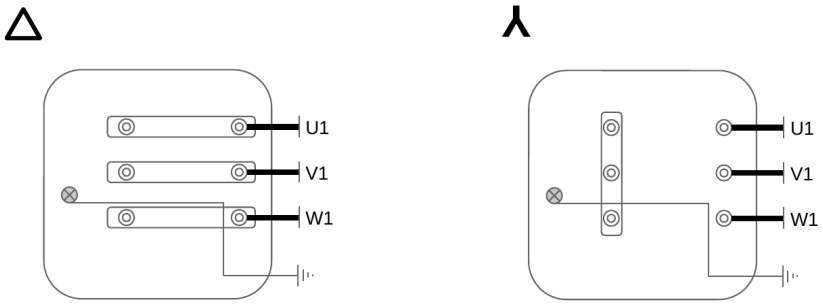

Delta (230 V) and star (400 V) connection

Single-phase motor

If the pump is fitted with a single-phase motor (motor option on request), connect the motor terminals as shown in the diagram below.

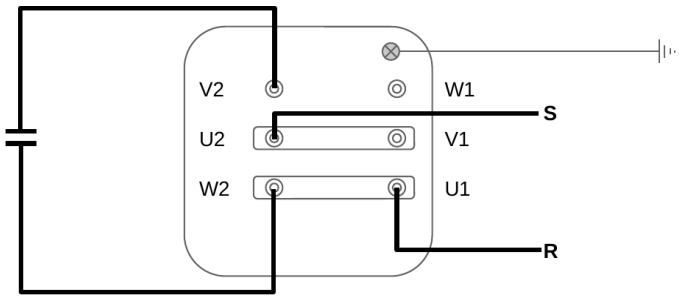

Single-phase motor connection

Oil filling

Each pump is supplied with a can of oil sufficient for commissioning. Fill the pump body before the first start-up.

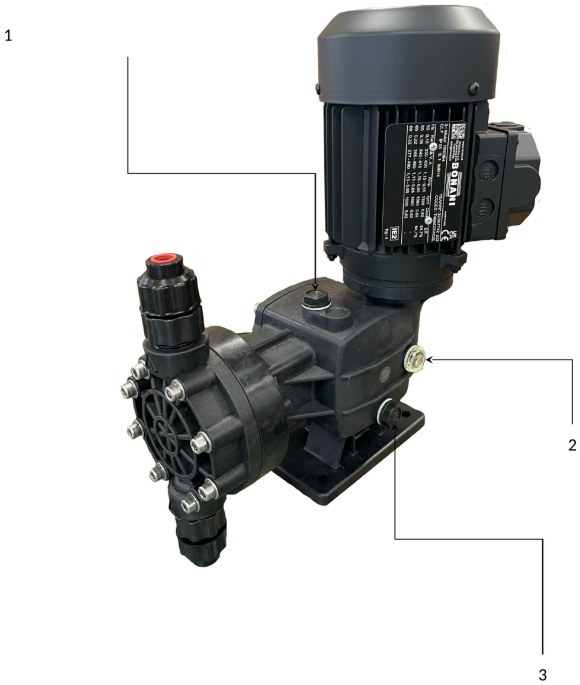

Oil filling and checking

1. Filler plug
2. Oil level sight glass
3. Drain plug

To replace the oil, use a mineral oil of viscosity ISO VG 320 (320 cSt at 40 °C or 23 °E at 50 °C). Oil for MecaFlow pumps is available in cans from 0.125 to 1 L (see Maintenance).

Checking the direction of rotation

Once the pump is fixed on its support, the motor connected and the pump body filled with oil:

1. Set the stroke length adjuster to 0 %.
2. Start the pump and check the direction of rotation of the motor.
3. If the motor turns in the wrong direction, swap two phases on the motor.

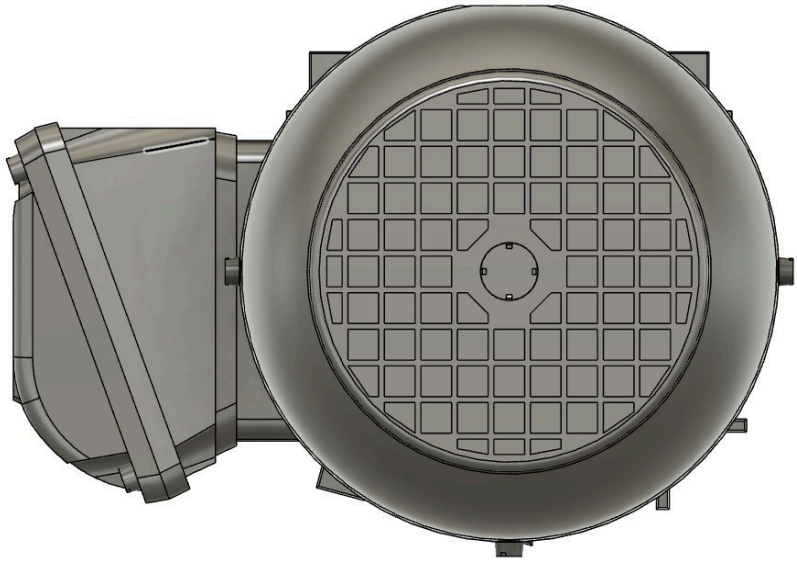

Direction of rotation, viewed from the fan side

The stroke length adjuster, at the rear of the pump, sets the stroke of the diaphragm, and therefore the flow rate, from 0 to 100 %. Set to 0 %, it allows start-up tests, with the oil filled, without hydraulic connection.

Hydraulic connection

Suction hose

- Keep the hose as short as possible and as straight as possible, with long-radius elbows if necessary. The total suction length must not exceed 2.5 m.
- The suction lift must never exceed 1.5 m.
- Air bubbles in the suction hose prevent priming. Avoid high points forming a siphon and interruptions in the liquid, and tighten the fittings perfectly.
- The liquid velocity must not exceed 0.7 m/s for a viscosity up to 100 cP.
- Choose the internal diameter of the hose according to the maximum flow rate of the pump:

Recommended internal diameter of the suction hose according to the maximum flow rate of the pump

Min. flow rate (L/h)	**Max. flow rate** (L/h)	**Diameter** (mm)
	15	6
15	30	10
30	125	16
125	155	20
155	260	25
260	500	32
500		40

For a viscous liquid, the diameter of the suction hose must not be smaller than that of the pump connections.

Recommended minimum installation

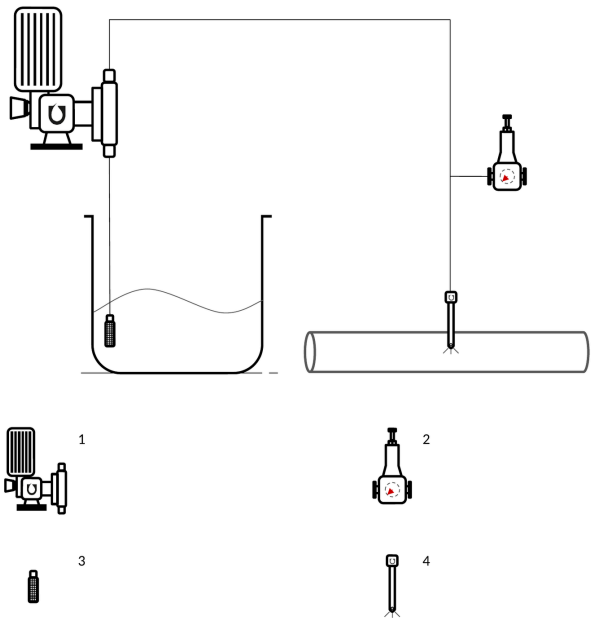

Minimum hydraulic installation

1. Dosing pump. Before commissioning, check that its materials are chemically resistant to the product to be injected, and that it is powerful enough for the network pressure.
2. Pressure relief valve. It releases the overpressure if the network valves remain closed.
3. Suction strainer. A foot valve is required on the suction side. Do not place the strainer at the bottom of the tank, so as not to draw in deposits.
4. Injection valve. It prevents the network pressure from reaching back into the pump head and allows work on the injection line without shutting off the network pressure.

Suction recommendations

Follow these recommendations for the correct operation and protection of the pump. In each pair of diagrams, diagram A shows the installation to avoid and diagram B the recommended installation.

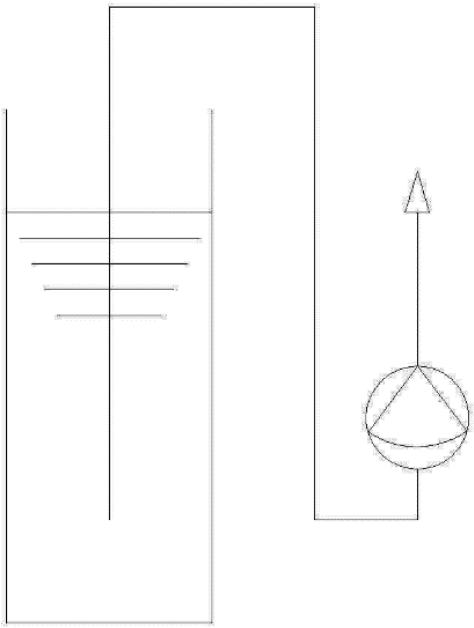

Diagram A: to avoid

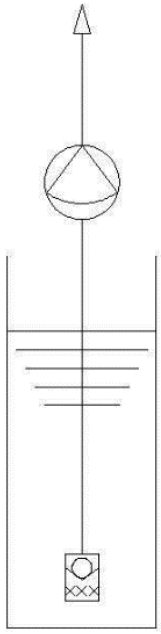

Diagram B: recommended

The liquid must not be interrupted in the upper part of the pipework.

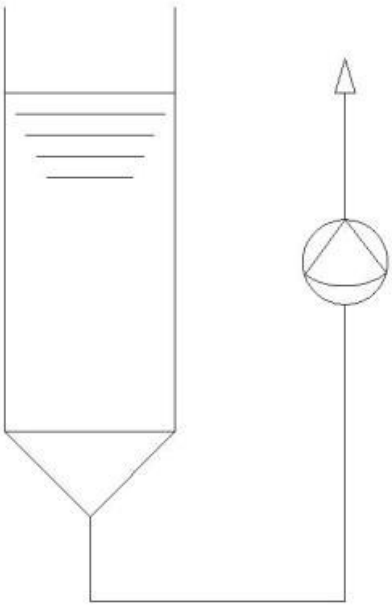

Diagram A: to avoid

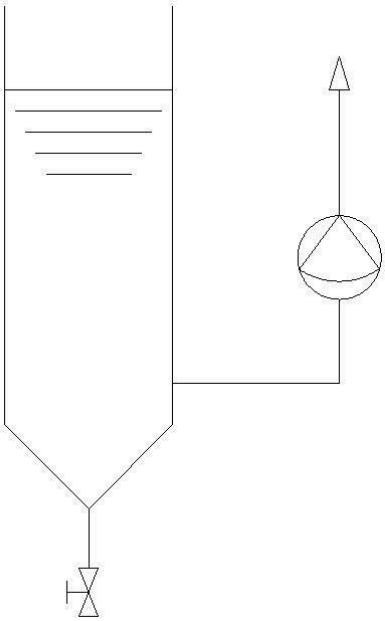

Diagram B: recommended

Sediment can enter the pump head and block the valves.

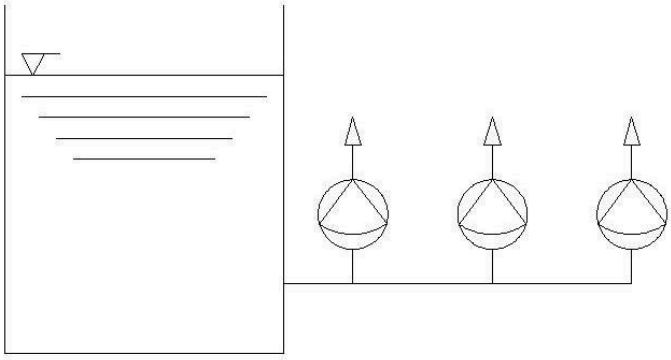

Diagram A: to avoid

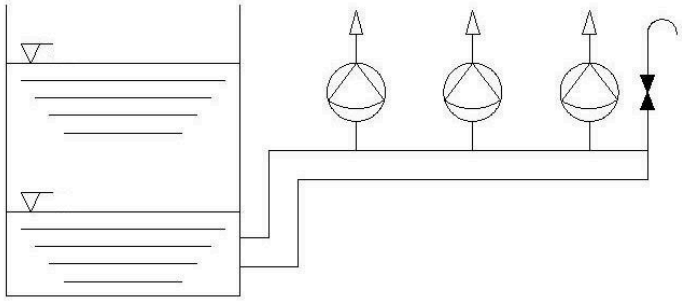

Diagram B: recommended

Several pumps on the same suction: oversize the hose and install a drain valve on the suction pipeline.

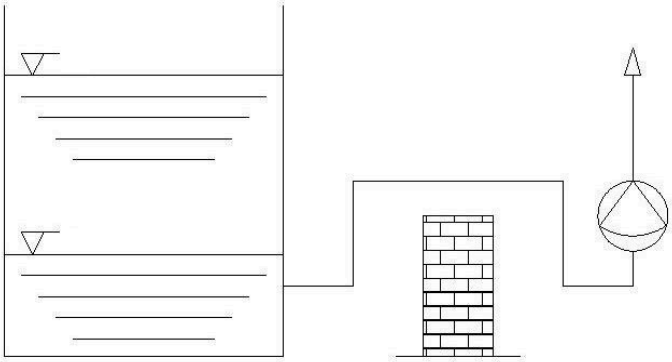

Diagram A: to avoid

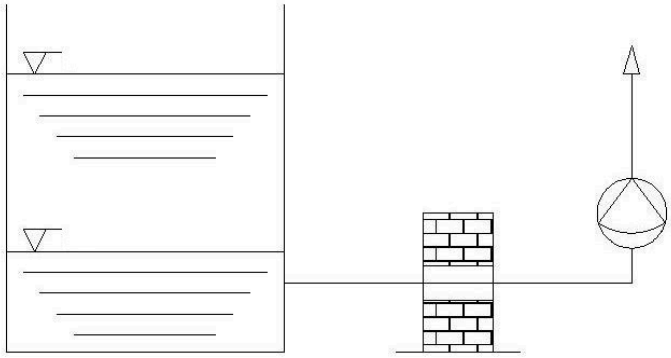

Diagram B: recommended

If the suction hose passes over a wall, the pump loses its prime before the tank reaches its minimum level. Suction has priority: its routing must be kept as simple as possible.

Protection against impurities

The pump can transfer suspended solid particles, but these disrupt the installation: they can clog and damage the hoses, the pump head and the valves. Keep the inlet of the suction hose 10 cm from the bottom of the tank and, except in special cases, install a filter suited to the dosed product.

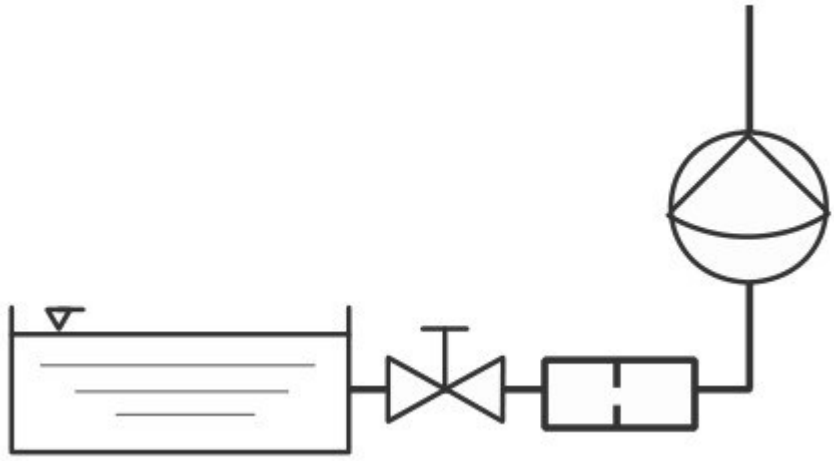

Suction with filter

Gas-releasing liquids

Products that release a lot of gas can cause corrosion and make maintenance difficult, especially with a vertical suction placed directly above the tank. Prefer a side suction, with a slight slope, so that the gases return to the tank.

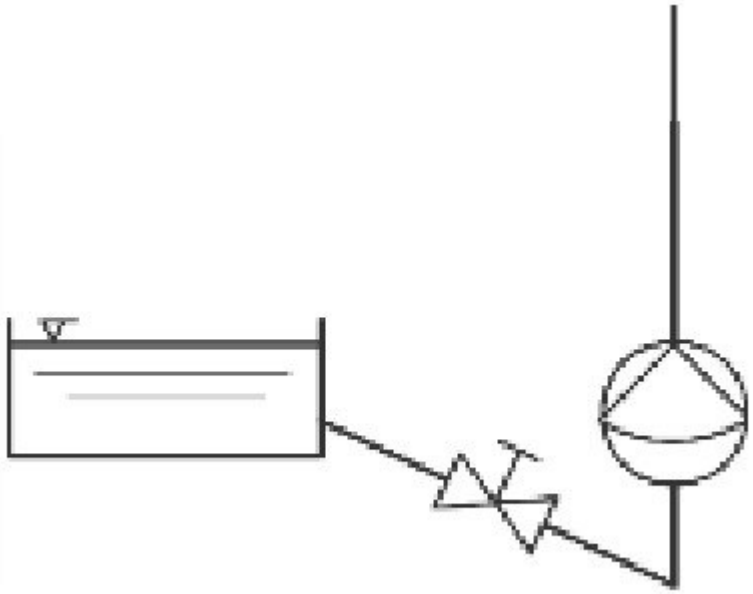

Side suction

Discharge and injection hose

- Keep the routing as straight as possible and support the pipework independently of the pump: its weight or expansion must not deform or stress the pump.
- Provide tees for fitting accessories: pressure gauge, valves, pulsation damper.
- If the pump is installed below the product level, install a check valve to prevent siphoning.
- The discharge pressure must be at least 0.5 bar higher than the suction pressure.

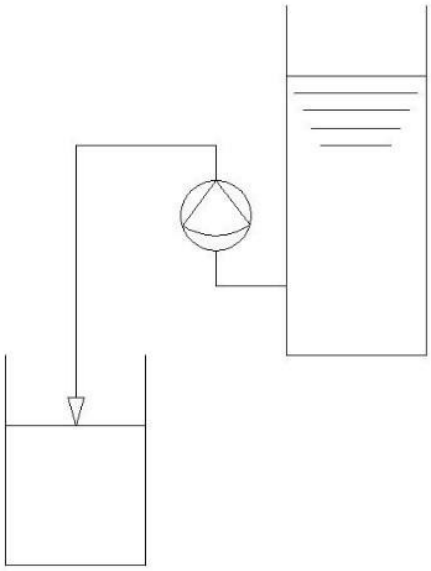

Diagram A: to avoid

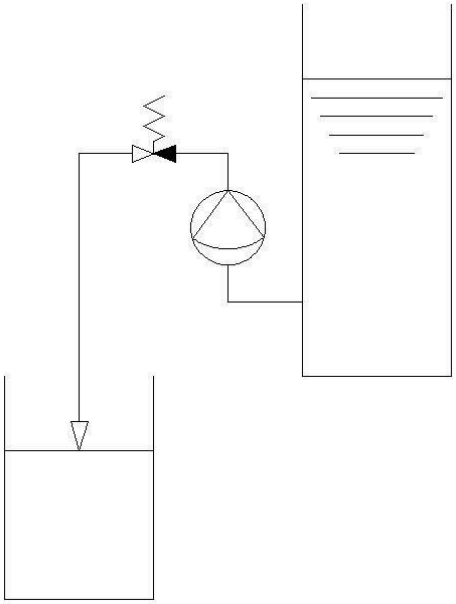

Diagram B: recommended

A difference in level creates a siphon that transfers the liquid uncontrolled. To prevent this, install a back-pressure valve set to more than 1 bar.

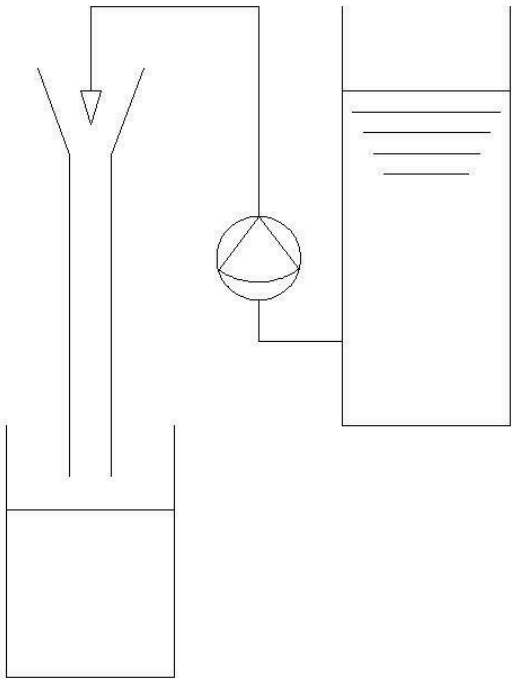

Transfer between two tanks

If the dosing pump is used for transfer between two tanks, place the discharge point higher than the level of the source tank to break the siphon.

Pressure relief valve

MecaFlow pumps are positive displacement pumps without an internal safety valve. Install an external pressure relief valve on the discharge, close to the pump and upstream of any other accessory, to protect the installation against overpressure. Without it, the pump and the installation can be seriously damaged.

The working pressure must not exceed the maximum pressure stated on the rating plate of the pump, even when the pressure relief valve opens. The return from the pressure relief valve must be visible and collected in a tank, so that a leak can be detected immediately.

Even with a free discharge, a pressure relief valve is recommended against overpressure caused by:

- freezing or solidification of the product;
- variations in the viscosity of the product, for example with temperature;
- accidental crushing of a flexible hose;
- any other unforeseen event that would cause the pressure to rise rapidly.

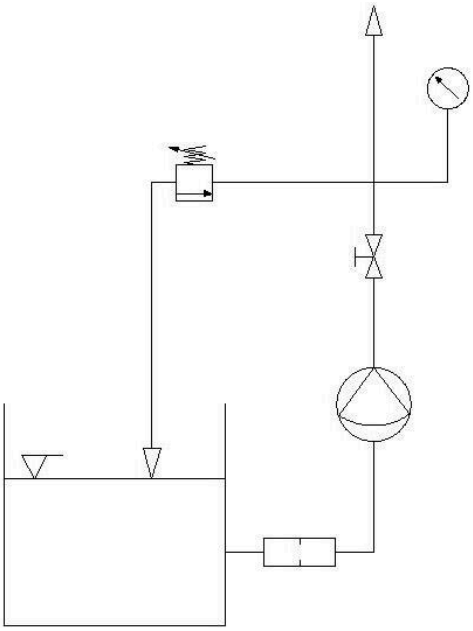

Diagram A: to avoid

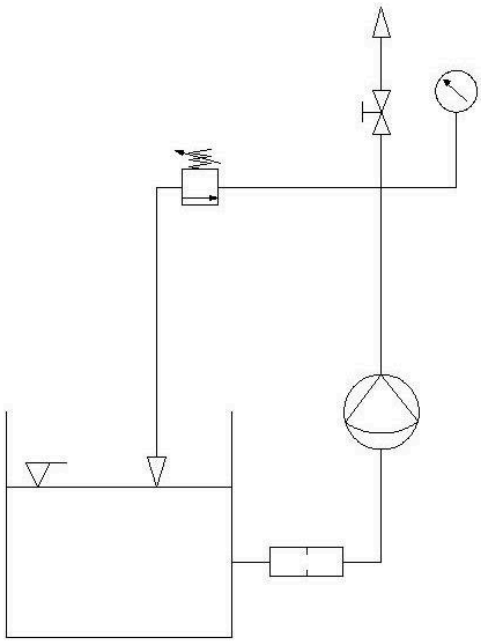

Diagram B: recommended

- Always place the isolating valve after the pressure relief valve.
- Connect the pressure relief valve to the tank with a dedicated hose that shows the flow and therefore allows a malfunction to be detected.

Flow rate calibration

Calibration measures the actual flow rate of the pump under the conditions of the installation.

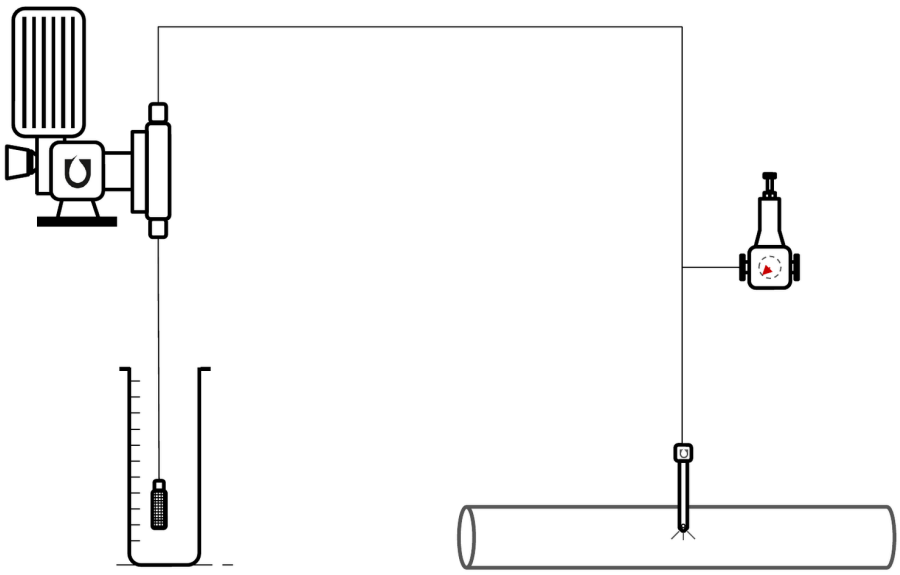

Calibration with a graduated beaker

1. Connect the pump to the pressurised network and prime it.
2. Place the suction strainer in a graduated beaker of suitable size.
3. Run the pump at 100 % for exactly 1 minute.
4. Read the volume drawn from the beaker.
5. Multiply this volume, in litres, by 60: the result is the actual flow rate of the pump in L/h.

The actual flow rate depends on the length and diameter of the hoses, the network pressure, and the density and viscosity of the product. This method takes the actual installation into account.

Maintenance

Regular maintenance keeps the pump performing and extends its service life.

Maintenance schedule

- **Visual check**, every week or every 60 operating hours: no product or oil leaks, no abnormal noise or vibration, general condition of the pump, tightness of the fittings, condition of the electrical components.
- **Washing of the hydraulic parts**, before any dismantling and with products that crystallise: wash the parts in contact with the product with a compatible liquid.
- **Valve replacement**, every 24 months or 8,000 hours: check and replace worn or clogged valves.
- **Diaphragm replacement**, every 24 months or 8,000 hours, or at the first signs of wear or rupture.
- **Replacement of the pushrod housing seals**, every 24 months or 8,000 hours, to prevent oil leaks.
- **Gearbox oil change**, every 24 months or 8,000 hours, with an ISO VG 320 mineral oil.

Before any work

- Stop the motor and disconnect the power supply to the pump.
- Close the suction and discharge valves and depressurise the circuit.
- Allow the pump to cool down.

Cleaning

- Wash the parts in contact with the product thoroughly, to prevent any contamination or crystallisation.
- Rinse the components with a solvent compatible with the product.

Oil check

- Check the oil level regularly: it must reach the middle of the level sight glass.
- Immediately replace oil contaminated by the dosed product, to prevent corrosion and premature wear of the internal parts.

Visual check points

- No leaks at the seals, the valves or on the pump body.
- Electrical connections in good condition, without oxidation.
- Power consumption and thermal protection within the specified limits.

Replacement diaphragms and oil

Replacement diaphragms, according to the diaphragm diameter of the pump (first group of the pump code):

Replacement diaphragms

Model	Code
D80	D080-DIAP
D110	D110-DIAP
D140	D140-DIAP
D170	D170-DIAP

Oil for MecaFlow pumps:

Oil for MecaFlow pumps

Capacity (L)	Code
0.125	MCF-HUI-0125
0.25	MCF-HUI-0250
0.5	MCF-HUI-0500
1	MCF-HUI-1000

The other parts are identified on the exploded views P02-MCF-VE-001.

Organisation

Keep a schedule of the work carried out and record any anomalies, use suitable tools (in particular for plastic parts) and train the maintenance staff on this pump. If a problem persists despite maintenance, contact Aqua'Tec technical support.

Troubleshooting

Flow rate too low

- Air entering the suction hose: check and retighten the fittings.
- Air in the pump head: temporarily set the stroke to 100 % to purge the air.
- Suction hose too long or too high: shorten the suction hose.
- High vapour pressure or liquid too hot: increase the suction head.
- Liquid too viscous: use a suction hose with a larger diameter.
- Clogged filter or valves: clean or replace the filter and the valves.
- Pressure relief valve incorrectly set: check and correct its setting.

Product leak

- Pump head screws insufficiently tightened: retighten them gradually.
- Ruptured diaphragm: replace the diaphragm.

Irregular or excessive flow rate

- Suction pressure higher than the discharge pressure: the discharge pressure must be at least 0.5 bar higher than the suction pressure.
- Back-pressure valve clogged or incorrectly set: check, clean and adjust it.
- Valves stuck in the open position: dismantle, clean or replace them.

Excessive motor heating

- Incorrect electrical connection: check the connection and the current draw of the motor.
- Discharge pressure too high: install a pressure gauge to monitor it and reduce it if necessary.
- Discharge hose blocked or crushed: clean or replace it.
- Oil level too low or oil contaminated: check and replace the oil if necessary.

Abnormal noise or vibration

- Pump poorly secured or vibrations transmitted by the hoses: install a pulsation damper.

The pump does not start

- Mechanical or electrical blockage: check the power supply to the pump and that the mechanical parts are not seized.

Related documents : P02-MCF-FT-001, P02-MCF-CO-001, P02-MCF-VE-001

Product codes : D80-Q4-P14-T18-FF-014, D80-Q4-P14-T18-II-014, D80-Q4-P14-T18-PI-014, D80-Q22-P12-T18-FF-014, D80-Q22-P12-T18-II-014, D80-Q22-P12-T18-PI-014, D80-Q39-P12-T18-FF-014, D80-Q39-P12-T18-II-014, D80-Q39-P12-T18-PI-014, D80-Q54-P12-T18-FF-014, D80-Q54-P12-T18-II-014, D80-Q54-P12-T18-PI-014, D110-Q65-P8-T18-FF-038, D110-Q65-P8-T18-II-038, D110-Q65-P8-T18-PI-038, D110-Q150-P8-T18-FF-038, D110-Q150-P8-T18-II-038, D110-Q150-P8-T18-PI-038, D110-Q250-P8-T18-FF-038, D110-Q250-P8-T18-II-038, D110-Q250-P8-T18-PI-038, D140-Q252-P8-T37-FF-034, D140-Q252-P8-T37-II-034, D140-Q252-P8-T37-PI-034, D140-Q305-P8-T37-FF-034, D140-Q305-P8-T37-II-034, D140-Q305-P8-T37-PI-034, D140-Q355-P8-T37-FF-034, D140-Q355-P8-T37-II-034, D140-Q355-P8-T37-PI-034, D170-Q450-P5-T37-FF-100, D170-Q450-P5-T37-II-100, D170-Q450-P5-T37-PI-100, D170-Q700-P4-T37-FF-100, D170-Q700-P4-T37-II-100, D170-Q700-P4-T37-PI-100, D170-Q800-P4-T37-FF-100, D170-Q800-P4-T37-II-100, D170-Q800-P4-T37-PI-100, D170-Q1000-P3-T37-FF-100, D170-Q1000-P3-T37-II-100, D170-Q1000-P3-T37-PI-100, D080-DIAP, D110-DIAP, D140-DIAP, D170-DIAP, MCF-HUI-0125, MCF-HUI-0250, MCF-HUI-0500, MCF-HUI-1000