MECAFLOW DOSING PUMPS – EXPLODED VIEWS

P02-MCF-VE-001

Exploded view · Mechanical dosing pumps

Numbered sectional views of the MecaFlow diaphragm dosing pumps, for the D80 and D110 diaphragms and for the D140 and D170 diaphragms, with the name of each part.

Exploded view

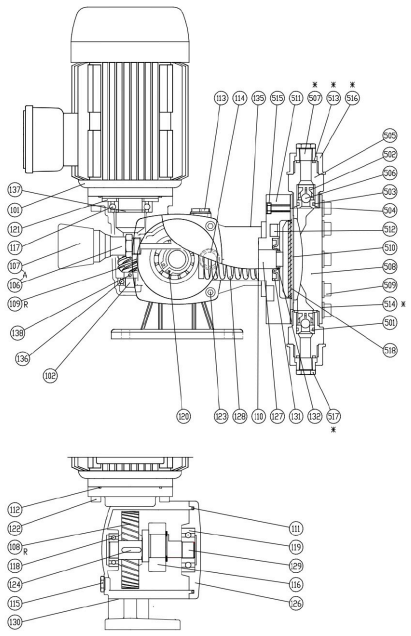

D80 and D110 diaphragms

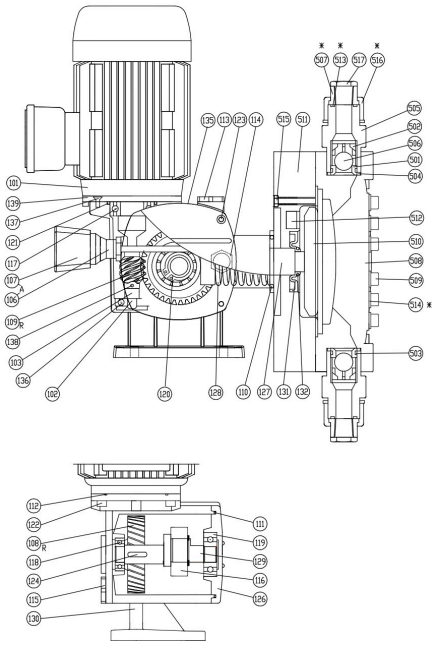

D140 and D170 diaphragms

Spare parts

The item numbers refer to the sectional views. The adjustment assembly (A) groups items 106 and 107; the gearbox assembly (R) groups items 108 and 109.

The items marked with an asterisk (*) on the views exist only on the versions with a plastic pump head: 507, 513, 514, 516 and 517 for the D80 and D110 diaphragms; 507, 513, 514 and 516 for the D140 and D170 diaphragms.

Replacement diaphragms and oil: manual P02-MCF-MA-001.

D80 and D110 diaphragms

No.	Description
101	Motor
102	Worm shaft
A	Adjustment assembly
106	Adjusting rod kit
107	Adjusting knob
R	Gearbox assembly
108	Worm wheel
109	Worm screw
110	Diaphragm chamber O-ring

MECAFLOW DOSING PUMPS – EXPLODED VIEWS

P02-MCF-VE-001

No.	Description
111	Pump body O-ring
112	Gearbox O-ring
113	Oil filler plug
114	Oil level plug
115	Oil drain plug
116	Eccentric shaft ball bearing
117	Motor ball bearing
118	Gearbox ball bearing
119	Pump body ball bearing
120	Eccentric shaft bearing circlip
121	Spacer
122	Motor screw
123	Pump body screw
124	Worm wheel key
126	Side plate
127	Pushrod
128	Spring
129	Eccentric shaft
130	Pump body
131	Pushrod seal
132	Pushrod seal O-ring
135	Pump label
136	Worm shaft ball bearing
137	Compensation spring
138	Spring pin
501	Valve seat
502	Valve cage
503	Seat O-ring
504	Valve body O-ring
505	Valve body
506	Valve disc
507	Hose tail
508	Pump head
509	Pump head screw
510	Diaphragm
511	Diaphragm chamber
512	Diaphragm chamber screw
513	Hose tail O-ring
514	Pump head screw washer
515	Pump head locknut

No.	Description
516	Union nut
517	Threaded connection plug
518	Diaphragm retaining ring (D80 only)

D140 and D170 diaphragms

No.	Description
101	Motor
102	Worm shaft
103	Worm shaft spacer
A	Adjustment assembly
106	Adjusting rod kit
107	Adjusting knob
R	Gearbox assembly
108	Worm wheel
109	Worm screw
110	Diaphragm chamber O-ring
111	Pump body O-ring
112	Gearbox O-ring
113	Oil filler plug
114	Oil level plug
115	Oil drain plug
116	Eccentric shaft ball bearing
117	Motor ball bearing
118	Gearbox ball bearing
119	Pump body ball bearing
120	Eccentric shaft bearing circlip
121	Motor flange O-ring
122	Motor screw
123	Pump body screw
124	Worm wheel key
126	Side plate
127	Pushrod
128	Spring
129	Eccentric shaft
130	Pump body
131	Pushrod seal
132	Pushrod seal O-ring
135	Pump label
136	Worm shaft ball bearing
137	Motor flange screw

No.	Description
138	Spring pin
139	Motor flange
501	Valve seat
502	Valve cage
503	Seat O-ring
504	Valve body O-ring
505	Valve body
506	Valve disc
507	Hose tail
508	Pump head
509	Pump head screw
510	Diaphragm
511	Diaphragm chamber
512	Diaphragm chamber screw
513	Hose tail O-ring
514	Pump head screw washer
515	Pump head locknut
516	Union nut
517	Threaded connection plug

Related documents : P02-MCF-FT-001, P02-MCF-MA-001