ELECTROFLOW MF SOLENOID DOSING PUMP

P05-ELF-FT-001

Product data sheet · Electromagnetic dosing pumps

Multifunction solenoid dosing pump, from 2 to 30 L/h and up to 16 bar, in wall-mounted or floor-standing version, with manual or automatic purge. Manual dosing, proportional to a water meter (pulses, ppm, mL/m³) or controlled by a 0-20 mA signal, with time-based programming and alarms.



Wall-mounted version



Floor-standing version

Technical data

Power supply	100 to 250 Vac, 50/60 Hz (multi-voltage)
Pump head	PVDF
Seals	TFE/P
Valves	Ball valves, ceramic balls
Air purge	Manual purge (ELF-... items); automatic purge for liquids that release gas (ELFD-... items)
Manual flow rate adjustment	0 to 100 % or 0 to 300 pulses/min
Proportional dosing modes	1 × N; 1 × N (M); 1 / N; mL per pulse; L per pulse; mL/m³; ppm
Inputs	Pulse water meter, 0-20 mA signal (adjustable set points), flow sensor, level probe, on/off remote control
Relay output	1 changeover contact, 250 Vac 5 A (resistive load)
Time-based programming	Daily and weekly, 16 on/off cycles per day, adjustable to the minute

Description

The ElectroFlow MF is a multifunction solenoid dosing pump. It doses a chemical continuously (manual mode), in proportion to the water flow rate measured by a pulse meter, or according to a 0-20 mA signal from an external device.

The pump adapts its power to the actual dosing conditions, and its flow rate to pressure variations in the installation. Power consumption and heating remain low, which limits wear on the mechanical and electrical components.

It is available in a wall-mounted version and a floor-standing version, with manual air purge (ELF-... items) or automatic air purge (ELFD-... items), the latter for liquids that release gas.

Specifications by model

Max. flow rate (L/h)	Max. pressure (bar)	Volume per stroke (mL)	Max. stroke rate (strokes/min)	Connection tubing (mm)	Min. power consumption (W)	Max. power consumption (W)
2	16	0.11	300	4 × 6	5	23
6	7		300	4 × 6	5	23
10	12	0.56	300	4 × 6	10	32
20	7	1.11	300	6 × 8	10	35

ELECTROFLOW MF SOLENOID DOSING PUMP

P05-ELF-FT-001

Max. flow rate (L/h)	Max. pressure (bar)	Volume per stroke (mL)	Max. stroke rate (strokes/min)	Connection tubing (mm)	Min. power consumption (W)	Max. power consumption (W)
30	5		300	6 × 8	10	35

Item codes

Max. flow rate (L/h)	Max. pressure (bar)	Code
Wall-mounted version, automatic purge		
2	16	ELFD-M-02
6	7	ELFD-M-06
10	12	ELFD-M-10
20	7	ELFD-M-20
30	5	ELFD-M-30
Floor-standing version, automatic purge		
2	16	ELFD-P-02
6	7	ELFD-P-06
10	12	ELFD-P-10
20	7	ELFD-P-20
30	5	ELFD-P-30
Wall-mounted version, manual purge		
2	16	ELF-M-02
6	7	ELF-M-06
10	12	ELF-M-10
20	7	ELF-M-20
30	5	ELF-M-30
Floor-standing version, manual purge		
2	16	ELF-P-02
6	7	ELF-P-06
10	12	ELF-P-10
20	7	ELF-P-20
30	5	ELF-P-30

Advantages

- PVDF pump head and TFE/P seals, compatible with many acidic or alkaline chemicals.
- Injection frequency up to 300 pulses/min.
- Flow rate regulated according to the installation pressure.
- Several built-in proportional dosing modes and time-based programming.
- Suction failure, overpressure, level and flow alarms, with relay signalling.

Applications

Injection of concentrated acids, disinfection with chlorine or hydrogen peroxide.

Dimensions

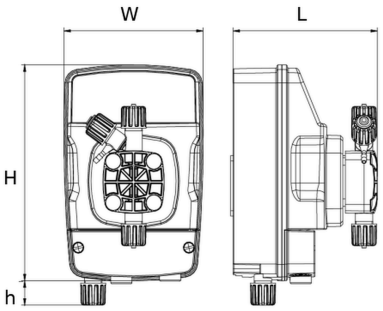

Wall-mounted version: dimensions W, L, H and h

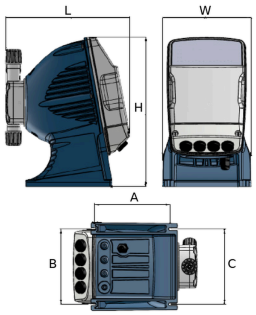

Floor-standing version: dimensions W, L, H, A, B and C

Dimensions

W (mm)	L (mm)	H (mm)	h (mm)	A (mm)	B (mm)	C (mm)
Wall-mounted version						
130.7	135.5	200	22.4			
Floor-standing version						
146	205	249		125	125	125

Accessories

Parts and accessories

Code	Description
ELF-CYL01-TFE	Pump head 1 to 15 L/h, PVDF/TFE
ELF-CYL20-TFE	Pump head 20 to 30 L/h, PVDF/TFE
ELF-CYLD-01-TFE	Pump head 1 to 15 L/h with automatic degassing, PVDF/TFE
ELF-CYLD-01-FPM	Pump head 1 to 15 L/h with automatic degassing, PVDF/FPM
ELF-SUP	Bracket for wall-mounted pump

The exploded views of the pump, the suction strainer and the injection valve are given in data sheet P05-ELF-VE-001.

Use

Operating modes

Manual. The pump doses continuously, up to 300 strokes per minute depending on the model. The flow rate is set during programming.

Proportional to the water meter. The pump receives the pulses from an external meter and processes them according to one of the following functions:

- 1 × N: N injections for each meter pulse;
- 1 × N (M): N injections for each pulse, with storage of up to 4 × N meter pulses during dosing;
- 1 / N: one injection every N meter pulses;
- mL per pulse: a set quantity of product, in millilitres, for each meter pulse;
- L per pulse: a set quantity of product, in litres, for each meter pulse.

Proportional in ppm or mL/m³. The pump doses directly in ppm (parts per million) or in millilitres per cubic metre of water. It calculates the injection rate needed to obtain the required concentration itself.

mA signal. The pump doses in proportion to a 0-20 mA signal from an external transmitter. The two set points (4 and 20 mA by default) are set in the programming menu.

Alarms

Each alarm is activated in the menus. An active alarm lights the alarm indicator and, if the relay output is activated, switches the relay for remote signalling.

- **Flow meter**: a flow meter fitted on the pump discharge (on request) checks that the injections actually take place.
- **Level**: the level probe signals that the product in the tank has run out; the pump stops. Active in all modes.
- **Underload (suction failure)**: empty tank, blocked valve, air ingress, suction tube disconnected or damaged; the pump stops. Active in all modes.
- **Overload (discharge overpressure)**: overpressure in the pump head, blocked discharge pipeline, blocked discharge valve or working pressure higher than that of the pump; the pump stops. Active in all modes.
- **Too many pulses**: in 1 × N (M), ppm and mL/m³ modes, the pump counts the injections still to be made. Above 4 × N (N = injections per meter pulse), it goes into alarm.

Other settings

- Clock: date and time, required for time-based programming.
- Time-based programming: daily and weekly, 16 on/off cycles per day, adjustable to the minute.
- Remote control or level: on/off control of the pump by an external contact, normally open or normally closed (normal or reversed polarity).
- Maximum frequency: can be reduced to suit the installation.
- Menu language.
- "Soft" reset: return to the original settings of all functions. "Hard" reset: choice of operating mode (proportional or instrumental) and return to factory data.

Detailed programming is described in manual P05-ELF-MA-001.

Related documents : P05-ELF-MA-001, P05-ELF-VE-001, P05-ELFPH-FT-001

Product codes : ELFD-M-02, ELFD-M-06, ELFD-M-10, ELFD-M-20, ELFD-M-30, ELFD-P-02, ELFD-P-06, ELFD-P-10, ELFD-P-20, ELFD-P-30, ELF-M-02, ELF-M-06, ELF-M-10, ELF-M-20, ELF-M-30, ELF-P-02, ELF-P-06, ELF-P-10, ELF-P-20, ELF-P-30, ELF-CYL01-TFE, ELF-CYL20-TFE, ELF-CYLD-01-TFE, ELF-CYLD-01-FPM, ELF-SUP