ELECTROFLOW MF DOSING PUMP MANUAL

P05-ELF-MA-001

Manual · Electromagnetic dosing pumps

Installation, commissioning, programming and maintenance of the ElectroFlow MF multifunction solenoid dosing pump. Manual mode, modes proportional to a meter (1 × N, 1 / N, mL per pulse, ppm…) and to an mA signal, alarms, timer and troubleshooting.

Technical data

Power supply	100 to 250 Vac, 50 to 60 Hz
Degree of protection	IP65
Protection against direct contact	Class I (protective earth conductor)
Operating conditions	Enclosed premises, altitude 2,000 m maximum, ambient temperature 5 to 40 °C
Maximum relative humidity	80 % up to 31 °C, then decreasing linearly to 50 % at 40 °C
Maximum suction lift	1.5 m above the liquid level
Alarm relay	1 changeover contact, 250 Vac, 5 A (resistive load)
Remote control	2-wire contact, 100 m maximum
Timer	16 on and off cycles per day, daily or weekly, adjustable to the minute
Pump head screw tightening torque	1.8 to 2 N·m (180 to 200 N·cm), 2.5 mm hex key
Materials in contact with the dosed product	PVDF pump head, PTFE diaphragm, TFE/P seals, ceramic and TFE/P valves, PVDF fittings, PE and PVC pipes



Pump in wall-mounted version



Pump in floor-standing version

Safety

Read this manual before installation and keep it for future reference. Any work inside the device must be carried out by qualified personnel.

Intended use

The pump is intended only for dosing small quantities of liquid (additive) to modify the concentration of a treated liquid. Any other use is improper and dangerous. If you are unsure whether the pump is suitable for an application, contact Aqua'Tec.

Hazardous products

- Follow the instructions of the manufacturer of the dosed additive.
- Only use the pump if its hydraulic part is intact.
- Use tubes suited to the product and to the operating conditions; if necessary, run them through a protective PVC sleeve.
- Before taking the pump out of service, neutralise the hydraulic part with a suitable reagent.

- In the event of a leak (O-ring, valves, tubes), stop the pump, depressurise the discharge tube and work wearing gloves, goggles and protective clothing.

Electrical safety

- On receipt, check that the pump is intact. If in doubt, do not use it.
- Before connecting, check that the data on the rating plate match the power network.
- Carry out the electrical installation in accordance with the standards of the country of installation.
- Do not touch the device with wet hands or feet, or with bare feet.
- Do not expose the device to the weather (rain, sun).
- Do not allow children or unqualified persons to use the pump unsupervised.
- Keep packaging materials out of the reach of children.
- In the event of a fault, stop the pump and do not attempt to repair it yourself. Use only original spare parts.

Dismantling

Before any dismantling or other work:

1. Disconnect the power supply on both poles, using an all-pole switch with a contact separation of at least 3 mm.
2. Carefully release the pressure in the pump head and in the discharge tube.
3. Drain the pump head by removing its four fixing screws. On reassembly, tighten to 1.8 to 2 N·m (180 to 200 N·cm).

A pump that is no longer used must be disconnected from the mains and its pump head emptied.

End of life

The device must not be disposed of with household waste. It must be handed over to a separate collection scheme for electrical and electronic equipment, or returned to the distributor when purchasing an equivalent device.

Overview

The ElectroFlow MF pump is a solenoid diaphragm dosing pump. The PTFE diaphragm is mounted on the plunger of a solenoid. With each electrical pulse, the plunger is attracted and expels the liquid from the pump head through the discharge valve. At the end of the pulse, a spring returns the plunger and the liquid is drawn in through the suction valve.

The pump requires no lubrication and little maintenance. Its materials allow chemically aggressive products to be dosed. A power board adapts the power consumption to the back pressure. This manual applies to pumps with automatic purge (ELFD-… items) and without automatic purge (ELF-… items). The flow rates, pressures and dimensions of each model are given in technical data sheet P05-ELF-FT-001, and the exploded views in data sheet P05-ELF-VE-001.

Acid- and heat-resistant plastic housing, keypad protected by a screen-printed film.

Installation

Before starting:

- check that the pump and the associated equipment are switched off;
- in the event of an anomaly or any sign of danger, stop and only resume work once the cause has been eliminated;
- do not install the pump in a location with a risk of fire or explosion;

- never use a damaged pump.

Mounting the pump

- Install the pump away from sources of heat, in a dry place, at 40 °C maximum. The temperature must not fall below 0 °C: the dosed product must remain liquid.
- Fix the pump with the wall plugs supplied or with fixings suited to the mounting surface.
- With products that give off aggressive vapours, do not expose the pump directly to these vapours.

The pump can be placed above or below the liquid level in the tank.

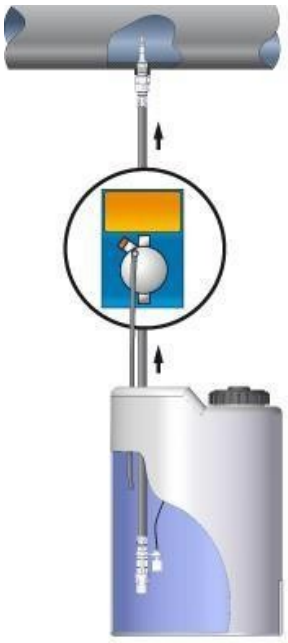

Pump above the tank

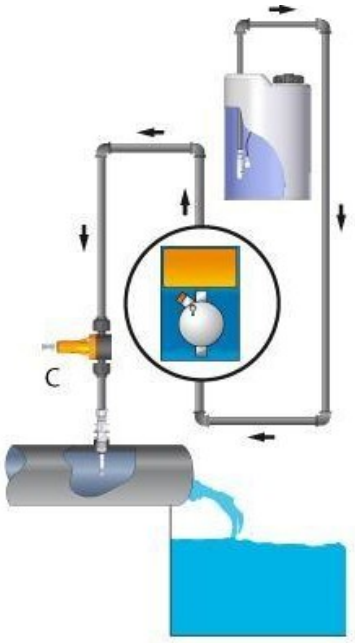

Pump below the tank level

- **Pump above the tank** (most common case): suction lift of 1.5 m maximum above the liquid level.
- **Pump below the tank level**: siphoning may occur. Check the injection valve regularly: when worn, it can let the product pass into the installation by vacuum, even when the pump is stopped. If the problem recurs, fit a set back-pressure valve (C) between the pump and the injection point.

Electrical connection

Comply with the standards in force in the country of installation. If the power cable has no plug, connect the device via an all-pole switch (circuit breaker) with a minimum contact separation of 3 mm. Disconnect all power supply circuits before accessing the connections.

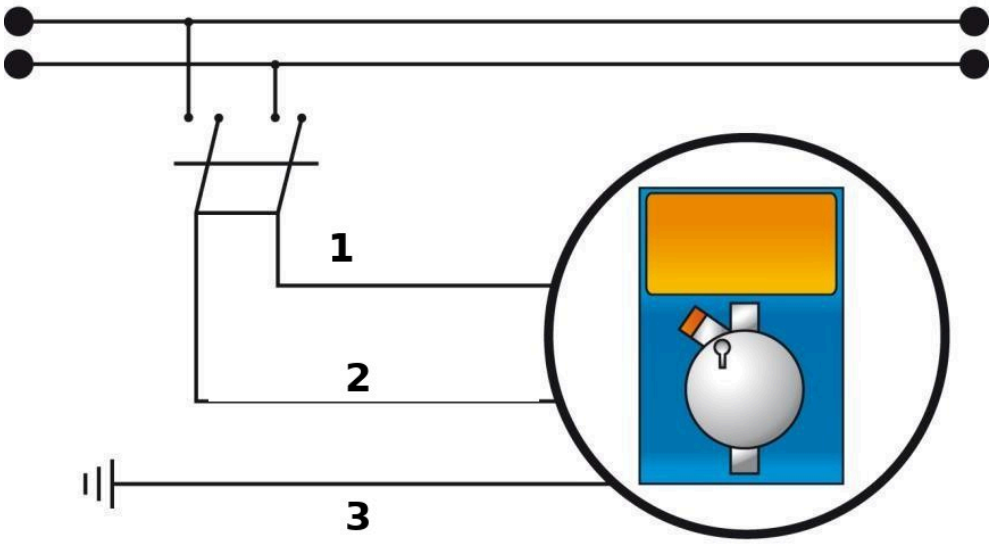

Connection to the 100 to 250 Vac, 50/60 Hz power network

1. Blue wire
2. Brown wire
3. Green and yellow wire (earth)

Connecting the tubes

The discharge fitting is always at the top of the pump: it receives the tube leading to the installation to be treated. The suction fitting is always at the bottom: it receives the tube fitted with the foot filter, immersed in the product tank.

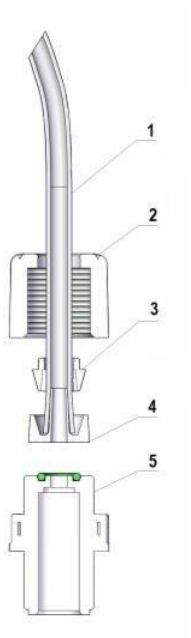

Connecting a tube, before tightening

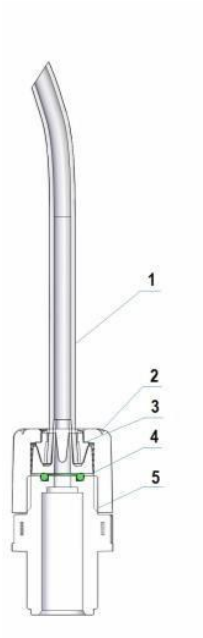

Connecting a tube, tightened

1. Remove the cap from the clamping nut (2).

2. Slide the tube (1) through the nut (2) and the ring (3).
3. Push the end of the tube onto the tapered end of the nozzle (4).
4. Place the nozzle (4) on the fitting (5).
5. Screw the nut (2) onto the fitting (5).

Priming

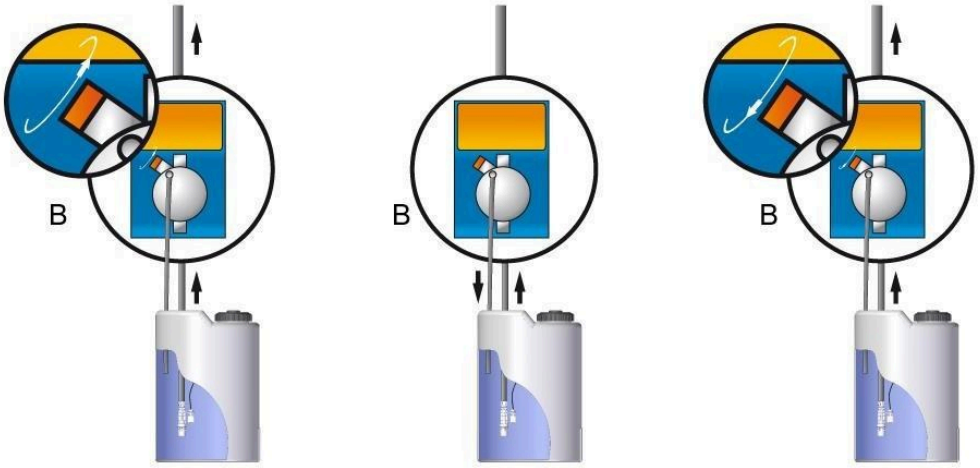

Priming via purge valve B

Connect the discharge tube, then, with the pump running:

1. Unscrew the knob of the purge valve (B).
2. Hold it open until all the air in the tube and the pump head has escaped.
3. Close the purge valve again.

If priming is difficult, draw the product in with a syringe through the purge fitting, while reducing the number of pump pulses.

Typical installation

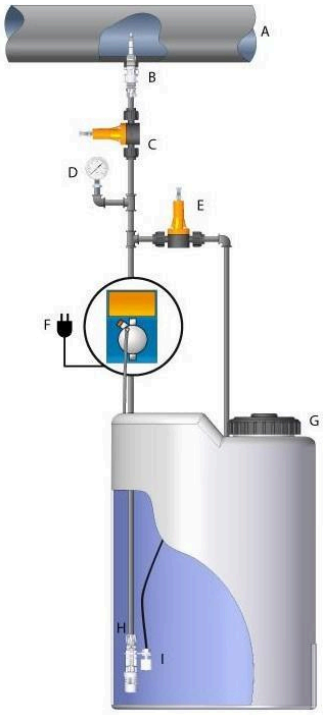

Typical installation

- **A.** Injection fitting
- **B.** Injection valve
- **C.** Back-pressure valve
- **D.** Pressure gauge
- **E.** Overflow valve
- **F.** Power socket
- **G.** Product tank
- **H.** Foot filter
- **I.** Level probe

Avoid tight bends in the suction and discharge tubes, which restrict the flow.

Injection valve

On the pipeline to be treated, at the most suitable point for injection, provide a 3/8" or 1/2" female fitting (not supplied). Screw the injection valve into this fitting with PTFE tape, then connect the discharge tube to the tapered end of the valve and secure it with the clamping nut. The injection valve also acts as a check valve.

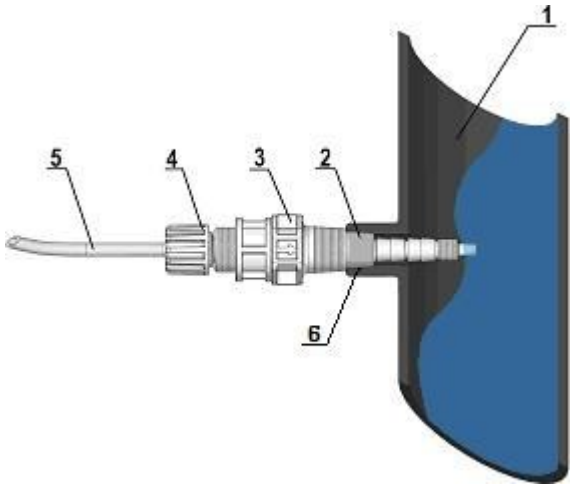

Fitting the injection valve

1. Pipeline to be treated
2. 3/8" or 1/2" tapered fitting
3. Injection valve
4. Tube clamping nut
5. Discharge tube
6. PTFE tape

Supplied items

- 4 m of flexible transparent PVC suction tube
- 2 m of semi-rigid opaque PE discharge pipe
- 1 injection valve 3/8" - 1/2" BSP
- 1 foot filter
- 1 user manual
- Optional: PTFE tube, for injecting concentrated acid

Dosing sulphuric acid (50 % maximum)

- Replace the flexible PVC suction tube with semi-rigid PE pipe, like the discharge tube.
- First remove all the water from the pump head: mixed with sulphuric acid, it causes strong gas release and heating, which damage the valves and the pump head.

To empty the pump head of a pump that is not fixed in place, run it upside down for 15 to 30 seconds, with no tubes on the fittings. Otherwise, remove and refit the pump head using its four screws.

Connecting peripherals

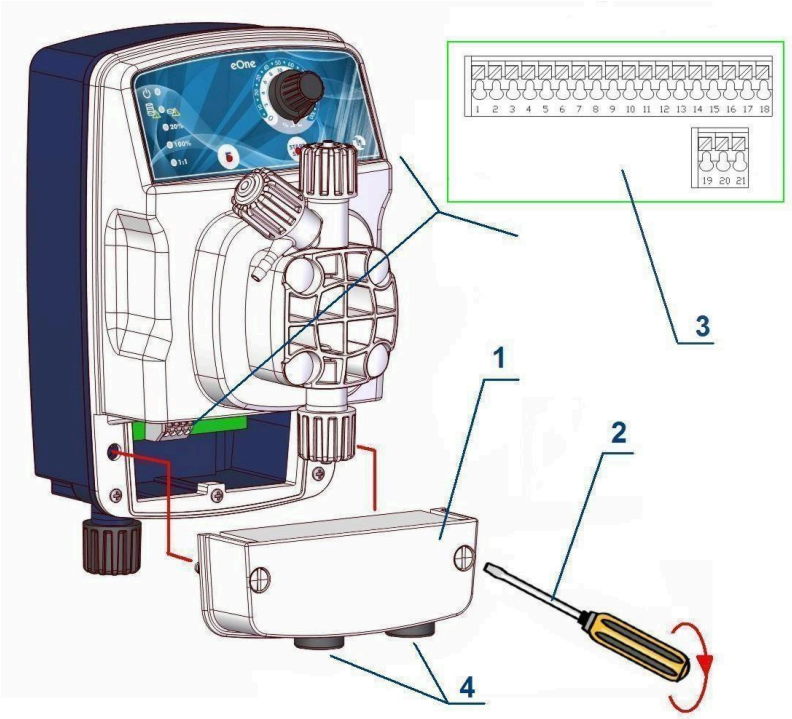

Access to the terminal block

1. Front cover
2. Flat-blade screwdriver
3. Terminal block
4. Cable glands

To access the terminal block, remove the front cover (1) by unscrewing its two plastic screws with a flat-blade screwdriver (2). The terminals of the terminal block (3) are spring-loaded: press the slot of the terminal with a small screwdriver, then insert the stripped conductor.

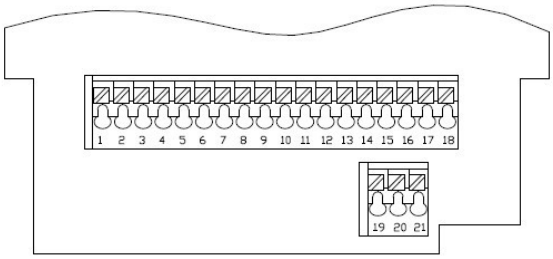

Connection terminal block

Connection terminal block

No.	Description
1	mA input (-)
2	mA input (+)
3	Meter input (-)

No.	Description
4	Meter input (+)
5	Level input (-)
6	Level input (+)
7	Flow meter input (-)
8	Flow meter input (+)
9	mA output (-)
10	mA output (+)
11	Not connected
12	Not connected
13	Not connected
14	PT100 input (-)
15	PT100 input (+)
16	
17	Chlorine probe (-VCL)
18	Chlorine probe (+VCL)
19	Alarm relay
20	Alarm relay (NC)
21	Alarm relay

Commissioning

Keypad and display

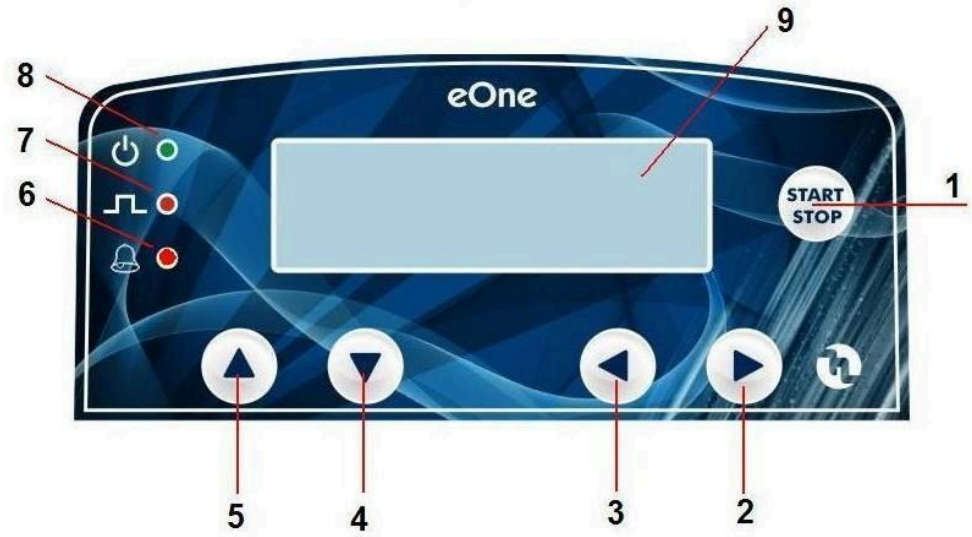

Keypad

1. **START STOP** key
2. ▶ key
3. ◀ key

4. ▼ key
5. ▲ key
6. Alarm indicator light: flow meter alarm, level alarm, maximum pulse difference alarm
7. Red indicator light: injection signalling
8. Two-colour indicator light: pump powered or on standby
9. Display

In the menus:

- the **START STOP** key gives access to the main menu;
- the ◀ and ▶ keys scroll through the choices at the same level;
- the ▼ key opens a submenu and moves to the next screen; the ▲ key returns to the previous screen;
- on a setting screen, ◀ decreases the value and ▶ increases it.

Selecting the configuration

When the pump is switched on for the first time, select its configuration. Each configuration only gives access to some of the functions, which simplifies programming. Scroll through the configurations with ◀ and ▶, then confirm with **START STOP**. To change the configuration later, carry out a total reset (see Settings).

Functions available according to the selected configuration

Function	VFT (FW01)	VFT-S (FW02)	MF (FW03)	VFT-T (FW05)	VFT-S-T (FW06)	MF-T (FW07)
Manual	●	●	●	●	●	●
1 × N	●		●	●		●
1 × N (M)	●		●	●		●
1 / N	●		●	●		●
mL per pulse		●	●		●	●
L per pulse		●	●		●	●
mL per m^3		●	●		●	●
ppm		●	●		●	●
mA		●	●		●	●
Timer				●	●	●

Main menu

From the start screen, press **START STOP**, then scroll with ◀ and ▶ through:

- the operating modes: MANUEL, 1xN, 1xN(M), 1÷N, ml x l, l x l, ml x m^3, PPM, mA;
- the additional functions: TEMPORISATEUR and RÉGLAGES.

Only the modes of the selected configuration are offered.

Operating modes

Manual mode

Available in all configurations. The pump doses continuously at the frequency set by the user, within one of these ranges:

- 0 to 300 strokes per minute, depending on the maximum flow rate of the model;
- 0 to 60 strokes per hour;
- 0 to 24 strokes per day.

Setting: in MODE MANUEL, press ▼, select COUPS/MINUTE, COUPS/HEURE or COUPS/JOUR with ◀ and ▶, press ▼, set N. COUPS with ◀ and ▶, then confirm with ▼.

During operation, the ◀ and ▶ keys display either the strokes per minute, the dosing percentage or the actual flow rate in L/h.

1 × N mode

The pump is connected to a pulse water meter, which sends contacts proportional to the volume of water treated. A flashing dot on the display indicates each pulse received.

For each pulse, the pump delivers N injections. Pulses received while the pump is delivering these N injections are ignored.

Settings (successive screens with ▼): N. COUPS, number of injections per pulse; N.COUPS/MIN, injection frequency.

1 × N (M) mode

As the 1 × N mode, but the pump stores in memory the pulses received while it is injecting. It automatically adapts the injection frequency to the interval between two meter pulses. The display continuously shows the number of injections still to be delivered. If this number exceeds 4 × N, the pump can go into alarm and block dosing, if the meter pulse alarm is activated.

Setting: N. COUPS, number of injections per pulse.

1 / N mode

The pump delivers one injection every N meter pulses. The display counts the pulses received up to N, then returns to zero after the injection.

Setting: N. COUPS, number of meter pulses per injection.

mL per pulse mode

For each meter pulse, the pump delivers the number of injections corresponding to the set volume of product, in millilitres. The display continuously shows the volume dosed.

Settings: SOLUTION, product concentration in %; VOL., volume to be dosed per pulse, in mL.

L per pulse mode

Identical to the previous mode, with a volume per pulse set and displayed in litres.

Settings: SOLUTION, product concentration in %; VOL., volume to be dosed per pulse, in L.

mL per m³ mode

The pump doses a quantity of product in millilitres per cubic metre of water. It calculates the injections itself from the following settings:

- **L/I COMPTEUR**: litres per pulse of the water meter. Values offered: from 0.1 to 1 L in steps of 0.05 L; from 1 to 10 L in steps of 0.5 L; from 10 to 100 L in steps of 5 L; from 100 to 1,000 L in steps of 50 L.
- **SOLUTION**: concentration of the product in its aqueous solution, from 1 to 100 %.
- **VOLUME ml x m³**: dose to be obtained in the installation, from 0.1 to 50,000 mL/m³.

ppm mode

The pump doses in parts per million. It calculates the injections itself from the following settings:

- **L/I COMPTEUR**: litres per pulse of the water meter, same values as in mL per m³ mode.
- **SOLUTION**: concentration of the product in its aqueous solution, from 1 to 100 %.
- **PPM**: concentration to be obtained in the installation, from 0.1 to 50,000 ppm.

mA mode

The pump receives a 0-20 mA signal from an external transmitter and delivers proportional injections according to this signal. The two set points are adjustable. Between these two points, the pump automatically varies the injection frequency.

- **VALEUR (1)**: current at set point 1, from which dosing starts. Default value: 4.0 mA.
- **VALEUR (2)**: current at set point 2. Default value: 20.0 mA.
- **COUPS/MN (1)**: strokes per minute at set point 1. Default value: 0.
- **COUPS/MN (2)**: strokes per minute at set point 2, i.e. at maximum dosing. This value must be higher than that of point 1, without exceeding the maximum frequency of the pump.
- **DESSOUS (1)**: ARRÊTER (stop) or CONTINUER (continue) dosing when the signal falls below set point 1.
- **DESSUS (2)**: ARRÊTER (stop) or CONTINUER (continue) dosing when the signal exceeds set point 2.

Settings

The RÉGLAGES menu contains: TÉLÉC/NIVEAU, DÉBIT PAR COUP, FRÉQUENCE MAX, ALARMES, HORLOGE, MOT DE PASSE, LANGUE and RÉINITIALISATION. Press ▼ to enter each item. Some items only exist in certain configurations.

Remote control and level

The pump can be started or put on standby remotely by a 2-wire contact located no more than 100 m away. A float level probe can also be connected to monitor the product level.

- CONFIG. CONTACT: **NIVEAU** (level) or **TÉLÉCOMMANDE** (remote control).
- CONTACT: **OUVERT** (open) or **FERMÉ** (closed), depending on whether the control contact is normally open or normally closed.

With direct polarity, the pump runs when the contact is open and goes on standby when the contact is closed. With reversed polarity, the opposite applies.

Flow rate per injection

The volume actually delivered with each injection can be set, so that the mL, L, mL per m³ and ppm modes dose accurately. The factory setting is 0.45 mL per injection.

- **MANUEL** (manual): enter the volume per injection directly (CONFIG. VALEUR, in mL).
- **AUTOMATIQUE** (automatic): calibration with a graduated measuring cylinder.

Automatic calibration:

1. Fill a graduated measuring cylinder with the product to be dosed and immerse the suction tube in it. Connect the discharge tube to the installation to be treated.
2. In RÉGLAGES, DÉBIT PAR COUP, select AUTOMATIQUE.
3. Press ▼ (AMORCAGE POMPE): the pump injects at its maximum frequency until the pump head and both tubes are full.
4. Press ▼ (POMPE AMORCEE), then set the calibration frequency in strokes per minute.
5. Press ▼ (CALIBRAGE POMPE): the pump carries out the series of calibration injections.
6. Read the volume drawn in on the measuring cylinder and enter it (CONFIG. VALEUR, in mL), then confirm with ▼.

The pump calculates the volume per injection: volume drawn in divided by the number of injections made.

Maximum frequency

The pump leaves the factory with a maximum injection frequency specific to the model. Depending on the needs of the installation, it can be reduced, then restored (FRÉQUENCE MAX, N.COUPS/MIN).

Clock

The clock is required for the timer. Set in turn the day of the week, the day, the month, the year, the hours, the minutes and the seconds. The time remains displayed during operation.

Password

A 4-digit password prevents access to the programming menus. Select ACTIVER, then enter the 4 digits one by one.

Language

Languages offered: English, Italian, French.

Reset

- **PARTIELLE** (partial): the pump keeps its configuration, but all factory values are restored and all user settings are erased.
- **TOTALE** (total): the pump returns to its factory state. On restarting, select the configuration (SETUP) with ◀ and ▶, then confirm with **START STOP**.

Alarms

Every alarm is signalled by the alarm indicator light and by a message on the display. If the alarm relay is activated, it also switches (terminals 19, 20 and 21).

Level alarm

The float level probe, connected to terminals 5 and 6 and immersed in the tank, signals that the product has run out. The pump stops and signals the alarm. To avoid false alarms caused by movements of the liquid, the alarm is triggered after a delay of at least 3 seconds.

Settings: ALR. DE NIVEAU (ACTIVER or DÉSACTIVER), RELAIS (ACTIVER or DÉSACTIVER).

Flow meter alarm

With an optional flow meter fitted on the discharge, the pump checks that each stroke of the solenoid actually produces an injection. An injection may be missed if the pump head, the valves or the O-rings are worn, or if air is present.

- **COUPS RÉFÉRENCE**: number of strokes in each check period.
- **DIFFÉRENCE MAX**: number of strokes without injection allowed during this period.
- **POMPE** (ACTIVER or DÉSACTIVER): whether or not dosing is blocked in the event of an alarm.
- **RELAIS** (ACTIVER or DÉSACTIVER).

Example: with 100 reference strokes and a maximum difference of 10, the pump continues as long as it counts at least 90 injections per 100 strokes. Below 90, it goes into alarm.

Meter pulse alarm

This alarm concerns the 1 × N (M), ppm and mL per m^3 modes (items IMP. COMPTEUR, IMP. COMPT. PPM and IMP. COMPT. mlxm^3). It is triggered when the meter sends so many pulses that the pump would have to exceed its maximum frequency: the number of pending injections then exceeds 4 × N, N being the number of injections per pulse. The factor of 4 avoids false alarms during temporary peaks. The number of pending injections is displayed.

This situation results from a programming error, or from a meter or pump unsuited to the installation. It is advisable to activate this alarm. If it is triggered frequently, have the installation checked.

Settings: alarm (ACTIVER or DÉSACTIVER), POMPE (whether or not dosing is blocked), RELAIS (ACTIVER or DÉSACTIVER).

Loss of prime and overpressure alarms

The pump monitors pressure variations in the installation.

- **Loss of prime** (DÉSAMORÇAGE): the pump no longer draws in product, for example because of a clogged foot filter or damaged valves. Message on the display, alarm indicator light on, relay activated. The pump stops after about 20 injections.
- **Overpressure** (SURPRESSION): the pressure exceeds the maximum pressure on the rating plate. Message on the display, alarm indicator light on, relay activated. The pump stops 20 injections after the fault begins. Air in the pump head can also trigger this alarm under certain pressure conditions: in this case, check that the pump is working correctly.

These two alarms are deactivated at the factory. They are activated in the SURPRESSION and DESAMORCAGE items of the ALARMES menu. For these two alarms, the relay always switches.

Timer

The timer is available in the VFT-T, VFT-S-T and MF-T configurations. It controls the starting and stopping of the pump, whatever the operating mode. The clock must be set.

- **DÉSACTIVÉ** (deactivated): no timer.
- **QUOTIDIEN** (daily): 16 on and off cycles, identical every day.
- **HEBDOMADAIRE** (weekly): 16 on and off cycles for each day of the week.

For each cycle (#01 to #16), select ACTIVER or DÉSACTIVER, then set the start time and the stop time (hours, then minutes). In weekly mode, first select the day (Lun to Dim, Monday to Sunday).

Maintenance

- Check the operation of the pump at least every 6 months, more often in the case of intensive use.
- Check that there are no deposits in the pump head. If necessary, remove it and wash it with water. For stubborn deposits, immerse it in an aqueous solution of hydrochloric acid, then rinse thoroughly with water.
- Regularly check the valve seals, the diaphragm and all seals, which are wearing parts that deteriorate over time.
- Regularly check the tightness of the injection valve and replace it if necessary: when worn, it can let the product flow back towards the pump.

Replacing the diaphragm

1. Unscrew the 4 screws of the pump head.
2. Unscrew the diaphragm and replace it, together with the O-ring.
3. Reassemble, tightening the screws crosswise, evenly, to 1.8 to 2 N·m (180 to 200 N·cm), with a 2.5 mm hex key.

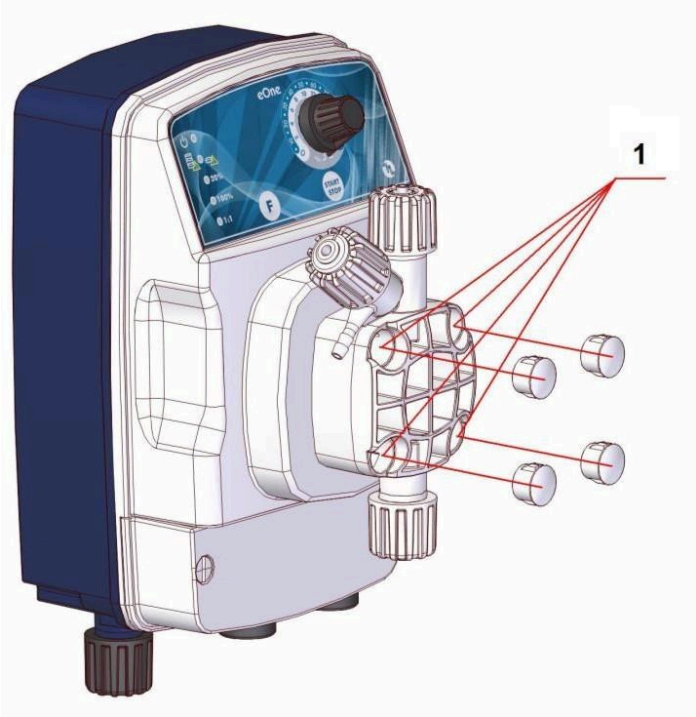

Pump head screws (1)

Precautions

- When removing the pump from the installation, carefully pull the tube out of the discharge fitting: it may contain product. Clean the housing if it has been in contact with the product.
- After a power cut, the pump may still deliver one or more pulses. Check that it has completely stopped before disconnecting the tubes.

Faults

Leaks

Leaks usually come from a loose fitting or nut, or from a ruptured discharge tube. Less often, they come from a ruptured diaphragm or a worn diaphragm seal: replace these parts by removing the four screws of the pump head, then retighten them evenly to 1.8 to 2 N·m maximum. After repair, clean any product residue from the pump, as it could damage the housing and the parts close to the solenoid.

The pump delivers pulses but does not inject product

- Remove the suction and discharge valves, clean them and refit them in the same position. If the seals have swollen, check their chemical compatibility with the dosed product.
- Check that the foot filter is not clogged.
- Check the injection valve.

No indicator light on, the pump does not inject

Check the power supply (socket and plug). If the pump still does not work, contact the Aqua'Tec after-sales service.

Related documents : P05-ELF-FT-001, P05-ELF-VE-001

Product codes : ELFD-M-02, ELFD-M-06, ELFD-M-10, ELFD-M-20, ELFD-M-30, ELFD-P-02, ELFD-P-06, ELFD-P-10, ELFD-P-20, ELFD-P-30, ELF-M-02, ELF-M-06, ELF-M-10, ELF-M-20, ELF-M-30, ELF-P-02, ELF-P-06, ELF-P-10, ELF-P-20, ELF-P-30