ELECTROFLOW PH-RX SOLENOID DOSING PUMP

P05-ELFPH-FT-001

Product data sheet · Electromagnetic dosing pumps

Solenoid dosing pump with built-in pH and ORP controller, from 2 to 30 L/h and up to 16 bar, in wall-mounted or floor-standing version. It doses according to the measurement from a probe, and offers the dosing modes and alarms of the ElectroFlow MF pump.



Wall-mounted version



Floor-standing version

Technical data

Power supply	100 to 250 Vac, 50/60 Hz (multi-voltage)
pH measuring range	0.00 to 14.00
Temperature input	Pt100 probe
Control based on the measurement	On/off or proportional; direct or reverse action
Pump head	PVDF
Seals	TFE/P
Diaphragm	PTFE
Valves	Ball valves, ceramic balls
Housing	Chemical-resistant reinforced PP
Air purge	Manual purge; automatic purge available for liquids that release gas
Manual flow rate adjustment	0 to 100 % or 0 to 300 pulses/min
Proportional dosing modes	1 × N; 1 × N (M); 1 / N; mL per pulse; L per pulse; mL/m^3; ppm
Inputs	Measuring probe, Pt100 temperature probe, pulse water meter, 0-20 mA signal (adjustable set points), flow sensor, level probe
Relay output	1 changeover contact, 250 Vac 5 A (resistive load)
Time-based programming	Daily and weekly, 16 programmes per day
Supplied	With PVDF installation kit

Description

The ElectroFlow pH-Rx is a solenoid dosing pump with a built-in controller. Connected to a measuring probe, it doses the product according to the measured value: on/off or in proportional mode, with direct or reverse action. A Pt100 temperature probe can be connected.

The pump also offers the functions of the ElectroFlow MF (P05-ELF-FT-001): manual dosing, dosing proportional to a water meter or controlled by a 0-20 mA signal, time-based programming and alarms.

It adapts its flow rate to pressure variations in the installation. Power consumption and heating remain low, which limits wear on the components.

It is available in a wall-mounted version and a floor-standing version, and is supplied with a PVDF installation kit.

ELECTROFLOW PH-RX SOLENOID DOSING PUMP

Specifications by model

Code	Max. flow rate (L/h)	Max. pressure (bar)	Volume per stroke (mL)	Max. stroke rate (strokes/min)	Connection tubing (mm)	Min. power consumption (W)	Max. power consumption (W)
Wall-mounted version							
ELFPH-M-02	2	16	0.11	300	4 × 6	5	23
ELFPH-M-06	6	7		300	4 × 6	5	23
ELFPH-M-10	10	12	0.56	300	4 × 6	10	32
ELFPH-M-20	20	7	1.11	300	6 × 8	10	35
ELFPH-M-30	30	5		300	6 × 8	10	35
Floor-standing version							
ELFPH-P-02	2	16	0.11	300	4 × 6	5	23
ELFPH-P-06	6	7		300	4 × 6	5	23
ELFPH-P-10	10	12	0.56	300	4 × 6	10	32
ELFPH-P-20	20	7	1.11	300	6 × 8	10	35
ELFPH-P-30	30	5		300	6 × 8	10	35

Advantages

- Measurement and dosing combined in a single device.
- PVDF pump head, TFE/P seals, PTFE diaphragm and reinforced PP housing, compatible with many acidic or alkaline chemicals.
- Injection frequency up to 300 pulses/min.
- Suction failure, overpressure, level and flow alarms, with relay signalling.

Applications

Injection of concentrated acids, disinfection with chlorine or hydrogen peroxide.

Dimensions

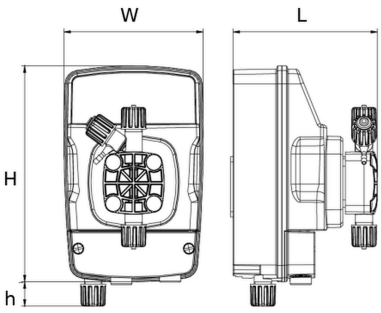

Wall-mounted version: dimensions W, L, H and h

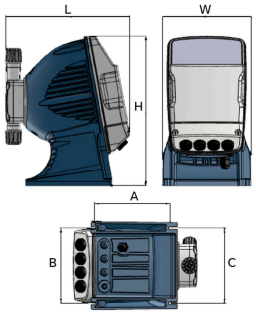

Floor-standing version: dimensions W, L, H, A, B and C

Dimensions

W (mm)	L (mm)	H (mm)	h (mm)	A (mm)	B (mm)	C (mm)
Wall-mounted version						
130.7	135.5	200	22.4			
Floor-standing version						
146	205	249		125	125	125

The exploded views of the ElectroFlow MF pump, its suction strainer and its injection valve are given in data sheet P05-ELF-VE-001.

Use

Operating modes

Control based on the measurement. The pump doses according to the measurement from the connected probe: on/off or in proportional mode, with direct or reverse action.

Manual. The pump doses continuously, up to 300 strokes per minute depending on the model. The flow rate is set during programming.

Proportional to the water meter. The pump receives the pulses from an external meter and processes them according to one of the following functions:

- 1 × N: N injections for each meter pulse;
- 1 × N (M): N injections for each pulse, with storage of up to 4 × N meter pulses during dosing;
- 1 / N: one injection every N meter pulses;
- mL per pulse: a set quantity of product, in millilitres, for each meter pulse;
- L per pulse: a set quantity of product, in litres, for each meter pulse.

Proportional in ppm or mL/m³. The pump doses directly in ppm (parts per million) or in millilitres per cubic metre of water. It calculates the injection rate needed to obtain the required concentration itself.

mA signal. The pump doses in proportion to a 0-20 mA signal from an external transmitter. The two set points (4 and 20 mA by default) are set in the programming menu.

Alarms

Each alarm is activated in the menus. An active alarm lights the alarm indicator and, if the relay output is activated, switches the relay for remote signalling.

- **Flow meter**: a flow meter fitted on the pump discharge (on request) checks that the injections actually take place.
- **Level**: the level probe signals that the product in the tank has run out; the pump stops. Active in all modes.
- **Underload (suction failure)**: empty tank, blocked valve, air ingress, suction tube disconnected or damaged; the pump stops. Active in all modes.
- **Overload (discharge overpressure)**: overpressure in the pump head, blocked discharge pipeline, blocked discharge valve or working pressure higher than that of the pump; the pump stops. Active in all modes.
- **Too many pulses**: in 1 × N (M), ppm and mL/m³ modes, the pump counts the injections still to be made. Above 4 × N (N = injections per meter pulse), it goes into alarm.

Other settings

- Clock: date and time, required for time-based programming.
- Time-based programming: daily and weekly, 16 on/off cycles per day, adjustable to the minute.
- Remote control or level: on/off control of the pump by an external contact, normally open or normally closed (normal or reversed polarity).
- Maximum frequency: can be reduced to suit the installation.
- Menu language.
- "Soft" reset: return to the original settings of all functions. "Hard" reset: choice of operating mode (proportional or instrumental) and return to factory data.

Related documents : P05-ELF-FT-001, P05-ELF-VE-001

Product codes : ELFPH-M-02, ELFPH-M-06, ELFPH-M-10, ELFPH-M-20, ELFPH-M-30, ELFPH-P-02, ELFPH-P-06, ELFPH-P-10, ELFPH-P-20, ELFPH-P-30