30D SINGLE-PARAMETER ANALYSER-CONTROLLER

Product data sheet · Control and monitoring

Analyser-controller with one measurement (pH, ORP, conductivity or 4-20 mA signal) for drinking water and irrigation installations. It controls up to two dosing pumps and stops dosing when the flow rate is zero. Wall-mounted housing or panel mounting.

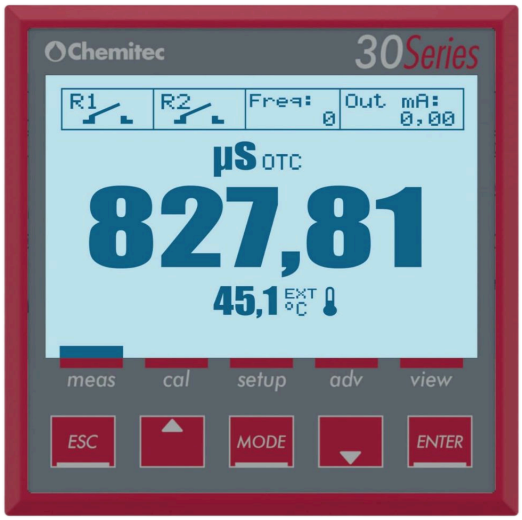

Technical data

Measurements	pH or ORP (analogue electrodes), conductivity (analogue cell K = 1), custom measurement via 4-20 mA signal
Measuring ranges	pH: 0.00 to 14.00; ORP: −2,000 to +2,000 mV; conductivity: depending on the cell (table below); mA input: depending on the sensor
4-20 mA sensor power supply	2 or 4 wires, 18 Vdc ± 5 %, 30 mA max.
Accuracy	pH: ± 0.01; ORP: ± 5 mV; conductivity: ± 5 % at the measuring point; mA input: ± 50 µA
Temperature input	Automatic Pt100 or Pt1000 recognition
Display	Colour TFT graphic LCD, 128 × 128 or 240 × 128 pixels; 5 control keys
Languages	English, Italian, French, German, Spanish
Analogue output	1 programmable 4-20 mA output, galvanic isolation, max. load 500 Ω; NAMUR: OFF, 3.6 mA, 22 mA
Set point relays	RL1 and RL2: 2 SPST mechanical relays, 250 Vac 5 A, 30 Vdc 3 A. RL1 and RL2: load activation; RL2: also probe cleaning or alarm repeat. Adjustable cycle time and time delay
Frequency outputs	SSR1 and SSR2: SPST 60 Vac, 100 mA max., bidirectional, NPN or PNP; on-state resistance 3 Ω at 100 mA; 0 to 400 pulses/min; pulse duration 100 ms
Digital input	Dry contact (REED), 5 Vdc, 6 mA max.
Power supply	230 Vac 50/60 Hz; low voltage 24 to 48 Vdc or 24 Vac
Electrical protection	Transformer insulation 4 kV; EMC: CEI-EN 55011 (05/99); CE compliant. According to UL, do not connect a voltage higher than 115 V to the relay outputs
Operating conditions	Operation −10 to 50 °C; storage and transport −25 to 65 °C; humidity 10 to 95 % non-condensing
Wall-mounted housing	ABS, IP65

Panel mounting	ABS front panel 96 × 96 mm; IP65 at the front, IP20 at the rear; overall depth 100 mm, of which 80 mm behind the panel (dimension A); allow 130 mm depth with the cables

Description

The 30D is a single-measurement analyser-controller for monitoring and managing drinking water and irrigation installations. It measures pH, ORP, conductivity, or any quantity transmitted by a 4-20 mA sensor, and controls up to two independent dosing pumps.

It is installed in a wall-mounted housing or on the front of an electrical panel.

Applications

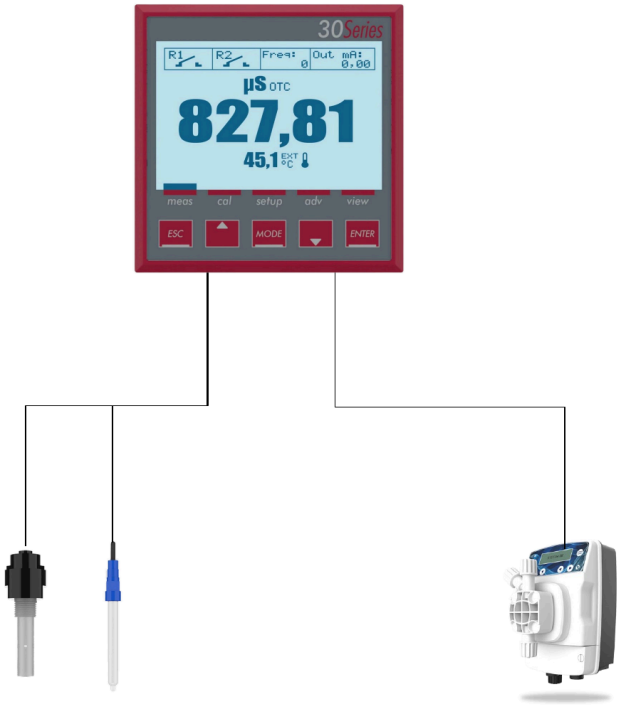

Connection of the probes (left) and of a dosing pump (right)

Measurement inputs:

- pH or ORP (analogue electrodes);
- conductivity (analogue cell K = 1);
- 4-20 mA signal from an external sensor.

Outputs:

- 1 programmable 4-20 mA analogue output;
- digital outputs: two set points and two frequency outputs (SSR1 and SSR2);
- 2 alarm relays.

Performance

Conductivity measuring ranges by cell

Cell constant (cm^{-1})	Min. conductivity (µS/cm)	Max. conductivity (µS/cm)
0.01	0.005	200
0.1	0.05	2000
0.2	0.1	4000
1	0.5	20,000
10	5	200,000
20	10	400,000

Dimensions

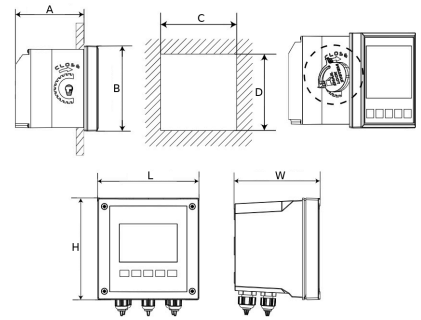

Panel mounting (top, dimensions A to D) and wall mounting (bottom, dimensions L, H and W)

Dimensions

A (mm)	B (mm)	C (mm)	D (mm)	L (mm)	H (mm)	W (mm)
Panel mounting						
80	96	92	92			
Wall mounting						
				144	144	122.5

Accessories

Probes and accessories

Code	Description
SND-PH	pH probe, plastic body, 8 bar
SND-ORP	ORP probe, plastic body, 8 bar
SND-EC	Conductivity probe 1/2", PVC, 5 m
SND-TEMP	Temperature probe 1/2", 2.5 m
SND-PORT	PP probe holder 3/4", 5 bar
SND-BNC-01	Coaxial cable 1 m, S7 screw and BNC connectors

Code	Description
SND-BNC-03	Coaxial cable 3 m, S7 screw and BNC connectors
SND-BNC-05	Coaxial cable 5 m, S7 screw and BNC connectors
SND-BNC-10	Coaxial cable 10 m, S7 screw and BNC connectors
SND-BNC-15	Coaxial cable 15 m, S7 screw and BNC connectors
SND-BNC-20	Coaxial cable 20 m, S7 screw and BNC connectors
SOL-PH4	pH 4 buffer solution, 90 mL
SOL-PH7	pH 7 buffer solution, 90 mL
SOL-EC	Conductivity buffer solution 1413 µS/cm, 500 mL

Use

Calibration of the measurements and dosing adjustment are carried out with the five keys on the front panel and the graphic display.

When the flow rate is zero, a dedicated digital input stops dosing immediately and triggers the alarm relay.

Related documents : P10-46D-FT-001

Product codes : SND-PH, SND-ORP, SND-EC, SND-TEMP, SND-PORT, SND-BNC-01, SND-BNC-03, SND-BNC-05, SND-BNC-10, SND-BNC-15, SND-BNC-20, SOL-PH4, SOL-PH7, SOL-EC