46D TWO-PARAMETER ANALYSER-CONTROLLER

P10-46D-FT-001

Product data sheet · Control and monitoring

Analyser-controller with one or two simultaneous measurements (pH, ORP, conductivity, chlorine, dissolved oxygen…) for drinking water and irrigation installations. It controls up to two dosing pumps, records the measurements and stops dosing when the flow rate is zero. Wall-mounted housing or panel mounting.



Technical data

Measurements	pH or ORP (analogue electrodes), conductivity (analogue cell K = 1), hydrogen peroxide, turbidity, free chlorine and total chlorine (analogue sensors), ozone, peracetic acid, dissolved oxygen
Measuring ranges	pH: 0.00 to 14.00; ORP: −2,000 to +2,000 mV; conductivity: depending on the cell (table below); mA input: depending on the sensor
4-20 mA sensor power supply	2 or 4 wires, 18 Vdc ± 5 %, 30 mA max.
Accuracy	pH: ± 0.01; ORP: ± 1 mV; conductivity: ± 2 % at the measuring point; mA input: ± 0.2 %
Temperature input	Automatic Pt100 or Pt1000 recognition
Display	Colour TFT graphic LCD, 128 × 128 or 240 × 128 pixels; 5 control keys
Languages	English, Italian, French, German, Spanish
Data recording	260,000 records, minimum interval 1 min, download via Wi-Fi from the built-in web server
Analogue outputs	2 programmable 4-20 mA outputs, galvanic isolation, max. load 800 Ω; NAMUR: OFF, 3.6 mA, 22 mA; PID control
Digital outputs	4: two set points and two alarms
Relays	RL1 and RL2: SPST mechanical relays, 250 Vac 5 A, 30 Vdc 3 A. RL1 to RL4: load activation, probe cleaning or alarm repeat. Adjustable cycle time and time delay
Frequency outputs	SSR1 and SSR2: SPST 60 Vac, 100 mA max., bidirectional, NPN or PNP; on-state resistance 5 Ω at 100 mA; 0 to 400 pulses/min; pulse duration 100 ms
Digital input	Dry contact (REED), 5 Vdc, 6 mA max.
Communication	RS485, Modbus RTU or ASCII (server)
Auxiliary output	24 Vdc ± 5 %, 250 mA max.

Power supply	100 to 240 Vac 50/60 Hz; low voltage 24 to 48 Vdc or 24 Vac
Electrical protection	Transformer insulation 4 kV; EMC: CEI-EN 55011 (05/99); CE compliant. According to UL, do not connect a voltage higher than 115 V to the relay outputs
Operating conditions	Operation −10 to 50 °C; storage and transport −25 to 65 °C; humidity 10 to 95 % non-condensing
Housing	Red ABS; UV-resistant polycarbonate front panel (panel mounting)
Degree of protection	Wall mounting: IP65; panel mounting: IP65 at the front, IP20 at the rear
Panel mounting	Front panel 96 × 96 mm; overall depth 100 mm, of which 80 mm behind the panel (dimension A); allow 130 mm depth with the cables

Description

The 46D is an analyser-controller that displays one or two simultaneous measurements, for monitoring and managing drinking water and irrigation installations. It controls up to two independent dosing pumps.

All outputs (relays, SSR and mA outputs) can be configured on the main measurement or on the secondary measurement. A built-in recorder stores 260,000 measurements, which can be downloaded via Wi-Fi from the device's web server.

It is installed in a wall-mounted housing or on the front of an electrical panel.

Applications



Connection of the probes (left) and of two dosing pumps (right)

Measurement inputs:

- pH or ORP (analogue electrodes);
- conductivity (analogue cell K = 1);
- hydrogen peroxide;
- turbidity;
- free chlorine and total chlorine (analogue sensors);
- ozone;
- peracetic acid;
- dissolved oxygen.

Outputs:

- 2 analogue control outputs, with PID control;
- 2 digital control outputs;
- digital alarm output.

Performance

Conductivity measuring ranges by cell

Cell constant (cm^{-1})	**Min. conductivity** (µS/cm)	**Max. conductivity** (µS/cm)
0.01	0.005	200

Cell constant (cm^{-1})	Min. conductivity (µS/cm)	Max. conductivity (µS/cm)
0.1	0.05	2000
0.2	0.1	4000
1	0.5	20,000
10	5	200,000
20	10	400,000

Dimensions

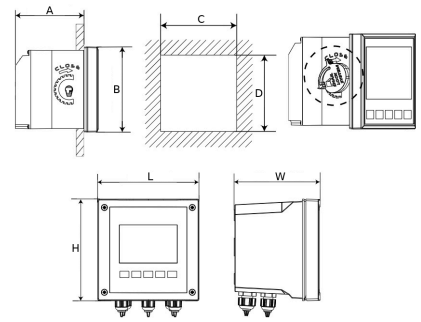

Panel mounting (top, dimensions A to D) and wall mounting (bottom, dimensions L, H and W)

Dimensions and weight

A (mm)	B (mm)	C (mm)	D (mm)	L (mm)	H (mm)	W (mm)	Weight (kg)
Panel mounting							
80	96	92	92				0.61
Wall mounting							
				144	144	122.5	1.05

Installation

The electrical connection of the pH probe, the conductivity probe, the temperature probe, a pulse meter and the power supply is shown in diagram P10-46D-SC-001.

Accessories

Probes and accessories

Code	Description
SND-PH	pH probe, plastic body, 8 bar
SND-ORP	ORP probe, plastic body, 8 bar
SND-EC	Conductivity probe 1/2", PVC, 5 m
SND-TEMP	Temperature probe 1/2", 2.5 m
SND-PORT	PP probe holder 3/4", 5 bar
SND-BNC-01	Coaxial cable 1 m, S7 screw and BNC connectors

Code	Description
SND-BNC-03	Coaxial cable 3 m, S7 screw and BNC connectors
SND-BNC-05	Coaxial cable 5 m, S7 screw and BNC connectors
SND-BNC-10	Coaxial cable 10 m, S7 screw and BNC connectors
SND-BNC-15	Coaxial cable 15 m, S7 screw and BNC connectors
SND-BNC-20	Coaxial cable 20 m, S7 screw and BNC connectors
SOL-PH4	pH 4 buffer solution, 90 mL
SOL-PH7	pH 7 buffer solution, 90 mL
SOL-EC	Conductivity buffer solution 1413 µS/cm, 500 mL

Use

Calibration of the measurements and dosing adjustment are carried out with the five keys on the front panel and the graphic display.

When the flow rate is zero, a dedicated digital input stops dosing immediately and triggers the alarm relay.

Related documents : P10-46D-SC-001, P10-30D-FT-001

Product codes : SND-PH, SND-ORP, SND-EC, SND-TEMP, SND-PORT, SND-BNC-01, SND-BNC-03, SND-BNC-05, SND-BNC-10, SND-BNC-15, SND-BNC-20, SOL-PH4, SOL-PH7, SOL-EC