46D ANALYSER-CONTROLLER – ELECTRICAL CONNECTION

P10-46D-SC-001

Installation diagram · Control and monitoring

Connection diagram of the 46D analyser-controller in pH and conductivity version, with temperature probe, pulse meter and power supply.

Diagram

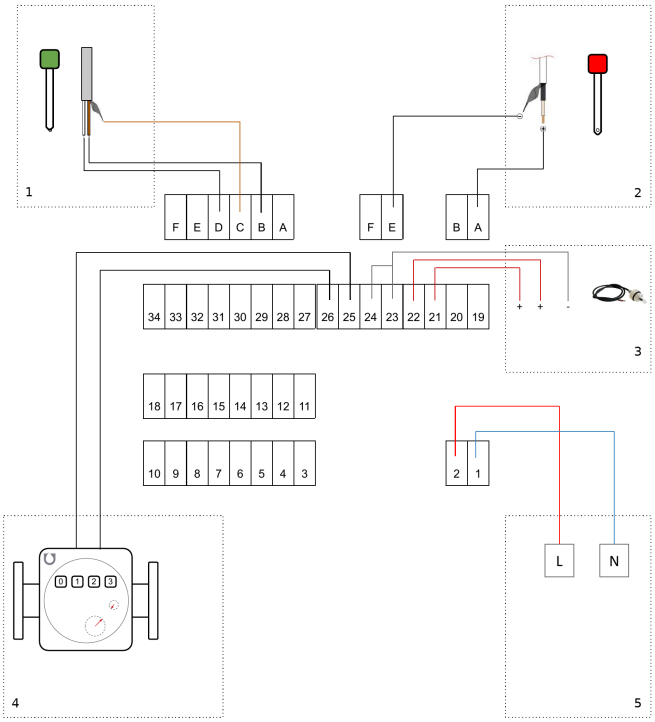

Connection of the probes, the meter and the power supply to the 46D terminal block

Key

1. Conductivity probe.
2. pH probe.
3. Temperature probe (3 wires).
4. Water meter with pulse output (REED contact).
5. Power supply (L: phase, N: neutral).

The figures and letters in the boxes are the terminal numbers of the device.

The specifications of the device are given in data sheet P10-46D-FT-001.

Related documents : P10-46D-FT-001