L SERIES FERTILISER TANKS

P18-L-FT-001

Product data sheet · Fertiliser tanks

Steel tanks from 30 to 600 L, vertical or horizontal, for injecting fertilisers into an irrigation network. By-pass mounting on the main pipeline, working pressure 8 bar.



L series fertiliser tanks



Stainless steel tank

Technical data

Body	S235JR steel (AISI 304 or 316 stainless steel on request)
Seals	EPDM
Treatment	Pickling, phosphating and polyester powder coating (epoxy coating on request)
Maximum working pressure	8 bar
Connections	BSP female thread (NPT on request)
Capacities	30 to 220 L as a vertical tank, 220 to 600 L as a horizontal tank

Description

L series fertiliser tanks provide a simple way of injecting fertilisers into an irrigation network. The tank is mounted in bypass on the main pipeline: part of the flow rate passes through the tank, dilutes the fertiliser and reinjects it into the pipeline.

Specifications and dimensions

Code	Capacity (L)	Inlet / outlet	PN (bar)	L (mm)	H (mm)	W (mm)	C (inch)	Weight (kg)
Vertical tank								
05-07-030	30	1/2"	8		730	315	1/2"	20
05-07-060	60	3/4"	8		745	450	3/4"	27
05-07-090	90	3/4"	8		945	450	3/4"	31
05-07-120	120	3/4"	8		1115	450	3/4"	39
05-07-160	160	3/4"	8		856	600	3/4"	40
05-07-220	220	3/4"	8		1050	600	1"	62
Stainless steel vertical tank								
05-07-121	120	3/4"	8		1115	450	3/4"	39
Horizontal tank								
05-07-222	220	3/4"	8	890	915	600	1"	60
05-07-300	300	3/4"	8	1170	915	600	1"	64
05-07-600	600	2"	8	1810	1100	750	2"	115

Other versions (on request)

Code	Capacity (L)
Stainless steel vertical tank	
05-07-221	220

Applications

The capacity of the tank is chosen according to the fertiliser used and the quantity to be applied. For example, with a fertiliser soluble at 0.7 kg per litre of water, a 220 L tank can prepare 154 kg of fertiliser (220 × 0.7 = 154 kg).

Performance

Fertiliser dilution time (min) according to the flow rate passing through the tank (L/h), for each capacity:

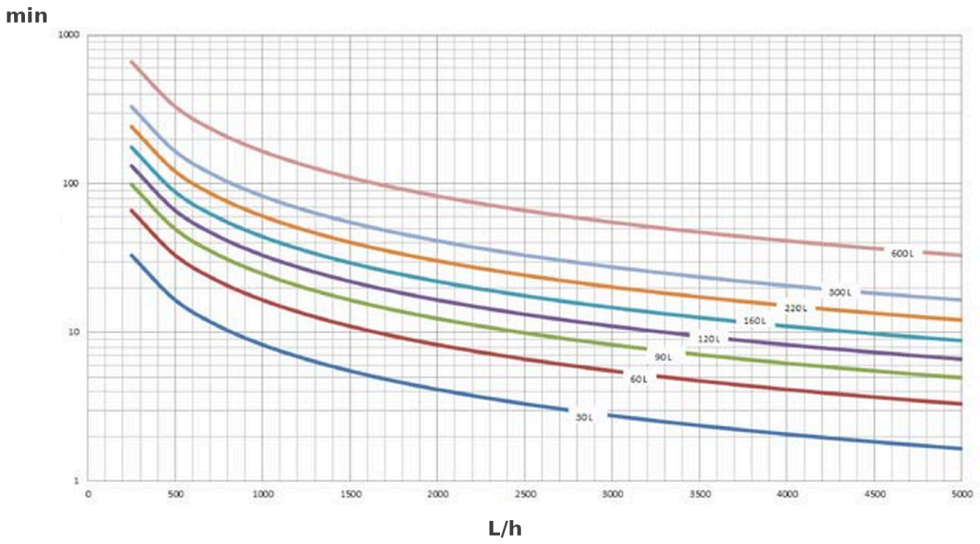

Dilution time (min) according to flow rate (L/h)

Dimensions

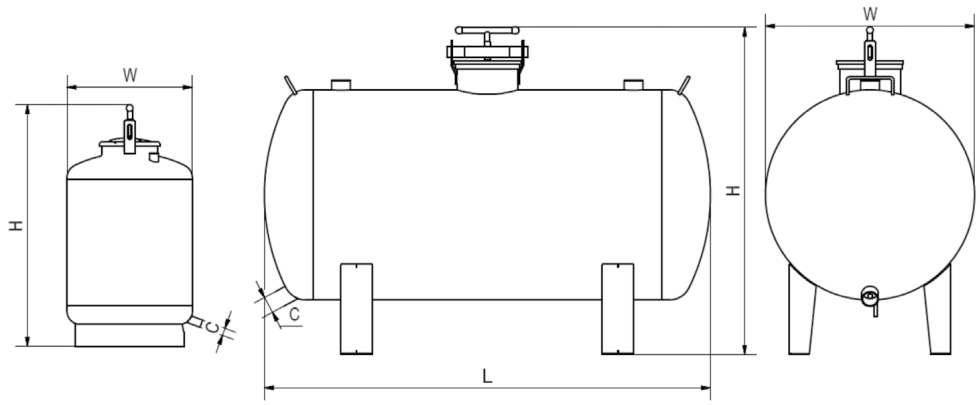

Dimensions H, L, W and C of vertical and horizontal tanks

C is the connection at the bottom of the tank. For vertical tanks, the height is given by H.

Installation

Connect the tank in bypass on the main pipeline. Install a screen filter downstream of the tank: it protects the irrigation network from undissolved fertiliser particles.

The fertigation head is a spool piece that is inserted in the main pipeline and carries the tank connections.

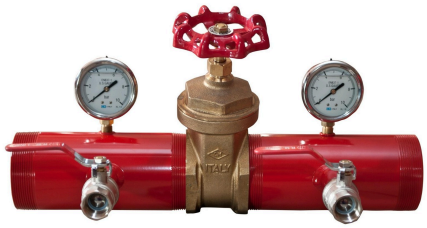

Fertigation head

Complete fertigation heads

Code	Inlet / outlet	Connection
05-10-151	1" 1/2	TM × TM
05-10-206	2"	TM × TM
05-10-258	2" 1/2	TM × TM
05-10-310	3"	TM × TM
05-10-411	4"	TM × TM
05-10-211	2"	F × F
05-10-311	3"	F × F
05-10-412	4"	F × F
05-10-500	5"	F × F
05-10-499	6"	F × F

Connection: TM = male threaded, F = flanges. Threaded spool pieces have a 1/4" female connection port and a 3/4" male connection port.

Spool pieces for fertigation head

Code	Inlet / outlet	Connection
02-05-300	1" 1/2	TM × TM
02-05-301	2"	TM × TM
02-05-302	2" 1/2	TM × TM
02-05-303	3"	TM × TM
02-05-304	4"	TM × TM
02-05-320	2"	F × TM
02-05-321	3"	F × TM
02-05-313	4"	F × TM
02-05-325	5"	F × F

Code	Inlet / outlet	Connection
02-05-308	6"	F × F

Maintenance

Rinse the tank after each fertigation to avoid damage caused by acidic fertiliser residues: open the drain valve at the bottom of the tank and fill the tank with clean water.

Product codes : 05-10-500, 05-07-030, 05-07-060, 05-07-090, 05-07-120, 05-07-121, 05-07-160, 05-07-220, 05-07-222, 05-07-300, 05-07-600, 05-07-221, 05-10-151, 05-10-206, 05-10-258, 05-10-310, 05-10-411, 05-10-211, 05-10-311, 05-10-412, 05-10-499, 02-05-300, 02-05-301, 02-05-302, 02-05-303, 02-05-304, 02-05-320, 02-05-321, 02-05-313, 02-05-325, 02-05-308