BISTABLE SENSOR FOR LEVEL MEASUREMENT

P21-BIST-FT-001

Product data sheet · Level detection

Magnetically operated microswitch sensor, mounted on a transparent tube, for detecting two levels (minimum and maximum) in a tank, with a float or a system of cable, pulleys and counterweight. Visual status indicator, IP65, 4 to 250 V AC.



Technical data

Switching	Magnetically operated microswitch, bistable
Visual indicator	As standard
Operating voltage	4 to 250 V AC; 30 V DC
Breaking capacity	3 A
Body	ABS
Lid	PC
Connector	To DIN EN 175301, can be rotated in 30° steps
Power supply cable	Nominal cross-section 1.5 mm²
Degree of protection	IP65 (connector fitted)
Ambient temperature	-20 to +80 °C
Mounting position	Vertical

Description

The bistable sensor detects two limit levels (minimum and maximum) in vessels and tanks. It is mounted on a transparent tube and operates:

- with a system of cable, pulleys and counterweight;
- or with a simple float moving inside the tube.

The sensor changes state when the float or the counterweight passes in front of it. It keeps this state until the float or the counterweight passes in front of it again.

Advantages

- Visual status indicator as standard.
- Low purchase cost.
- Quick and simple installation.

Performance

The sensor bears the CE marking in accordance with the Low Voltage Directive 2014/35/EU and the EMC Directive 2014/30/EU.

Explosive atmospheres: according to standard EN 60079-11, the sensor is simple electrical apparatus, with no ignition source of its own. It therefore does not fall within the scope of the ATEX Directive 2014/34/EU. The use of an amplifier is recommended.

Dimensions

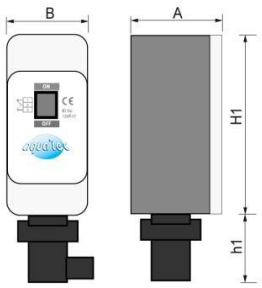

Dimensions A, B, H1 and h1

Dimensions

Code	A (mm)	B (mm)	H1 (mm)	h1 (mm)
139627	50	40	95	55

Installation

Each sensor is fixed to the transparent tube by a fixing system, at the height of its switching point. The sensor is mounted vertically.

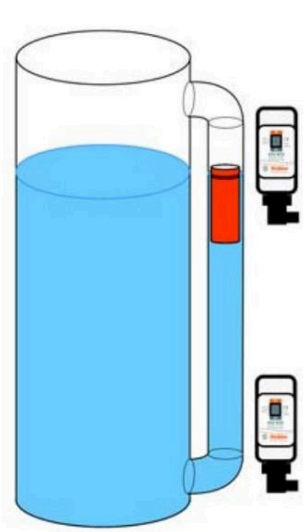

Installation with float

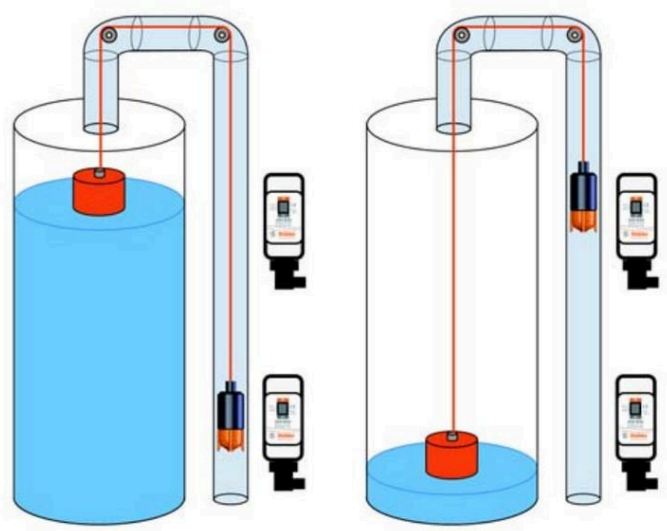

Installation with cable and pulleys

Minimum distances to be provided between two sensors: a = 40 mm and b = 100 mm.

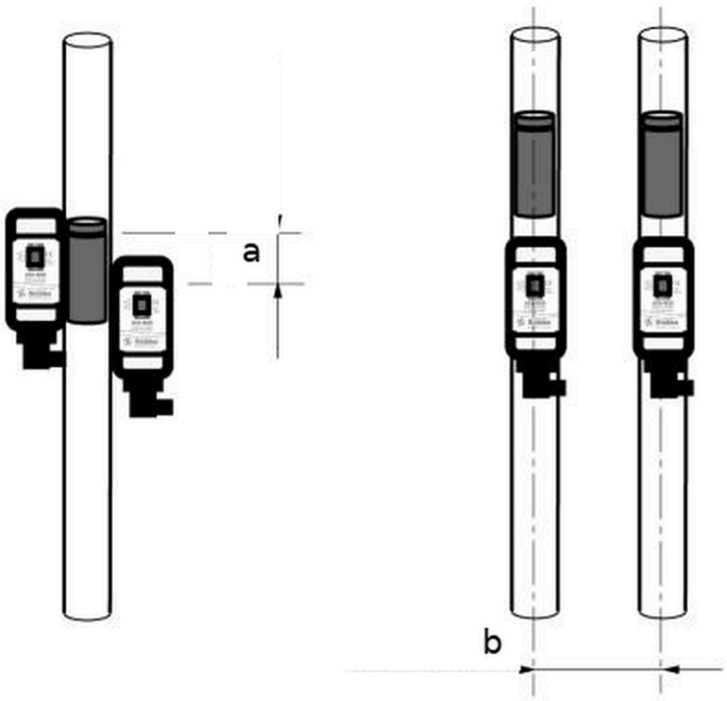

Minimum distances a and b between two sensors

Accessories

Two level management kits are available: a kit that does not pass through the tank wall, with cables and pulleys, and a complete kit to be installed with a tank connector through the tank wall.

Accessories

Code	Description
KIT-NIV-PL	Non-penetrating level kit, with cables and pulleys
KIT-NIV-TP	Complete level kit, for installation through the tank wall

Safety

During mounting, check that the state shown by the visual indicator matches the position of the float or the counterweight. Otherwise, the sensor will give a false signal the first time the float passes, upwards or downwards.

Product codes : 139627, KIT-NIV-PL, KIT-NIV-TP