COMPOSITE MULTI-JET WATER METER

W01-WMMJ-FT-002

Product data sheet · Water meters

Multi-jet water meter with composite body and head, from 1/2" to 1" 1/2, with dry dial and magnetic drive. MID 2014/32/EU approved (formerly MID 2004/22/EC), many options (pulse output, check valve, radio module).



Technical data

Type	Multi-jet meter, non-rotatable dry dial, magnetic drive
Materials	Composite body and head, mineral glass
Register	Sealed, direct roller reading
Approval	MID 2014/32/EU (formerly MID 2004/22/EC), modules B + D, or EEC 75/33
Working pressure	16 bar
Temperature class	T30/T50
Sizes	1/2" to 1" 1/2 (DN 15 to DN 40)

Description

Multi-jet water meter with composite body and head. The dial is dry and non-rotatable, and the drive magnetic. The sealed register gives direct roller reading.

The meter is approved under the MID directive 2014/32/EU (formerly MID 2004/22/EC), modules B + D, or under directive EEC 75/33.

Three versions are available:

- standard (codes ending in -ST);
- with pulse output (codes ending in -PE);
- pulse-ready, prepared to receive a pulse output (codes ending in -PR). The pulse output for multi-jet meters is ordered under code WMPE-MJ.

Product codes

Code	DN	Inlet / outlet
Standard		
WMMJ-C-012-ST	13/15	1/2"
WMMJ-C-034-ST	20	3/4"
WMMJ-C-100-ST	25	1"
WMMJ-C-114-ST	30	1" 1/4
WMMJ-C-112-ST	40	1" 1/2
With pulse output		
WMMJ-C-012-PE	13/15	1/2"
WMMJ-C-034-PE	20	3/4"
WMMJ-C-100-PE	25	1"

COMPOSITE MULTI-JET WATER METER

W01-WMMJ-FT-002

Code	DN	Inlet / outlet
WMMJ-C-114-PE	30	1" 1/4
WMMJ-C-112-PE	40	1" 1/2
Pulse-ready		
WMMJ-C-012-PR	13/15	1/2"
WMMJ-C-034-PR	20	3/4"
WMMJ-C-100-PR	25	1"
WMMJ-C-114-PR	30	1" 1/4
WMMJ-C-112-PR	40	1" 1/2

Options on request

- Anti-condensation device.
- Check valve.
- Various types of pulse output.
- Preparation for a radio module.
- Copper-can register.
- Lengths and other variants.
- Customisation: customer logo, barcode, matrix code, label or tag.



Exploded view of the composite meter

Performance

Metrological performance (MID)

DN	Inlet / outlet	Min. flow rate (m^3/h)	Transitional flow rate (m^3/h)	Nominal flow rate (m^3/h)	Max. flow rate (m^3/h)	Minimum reading (L)	Maximum reading (m^3)
13/15	1/2"	0.0313	0.05	2.5	3.13	0.05	99,999
20	3/4"	0.05	0.08	4	5	0.05	99,999
25	1"	0.0788	0.126	6.3	7.88	0.05	99,999
30	1" 1/4	0.125	0.2	10	12.5	0.05	99,999
40	1" 1/2	0.2	0.32	16	20	0.5	999,999

Q1 = minimum flow rate, Q2 = transitional flow rate, Q3 = permanent flow (“Nominal flow rate” column), Q4 = maximum flow rate.

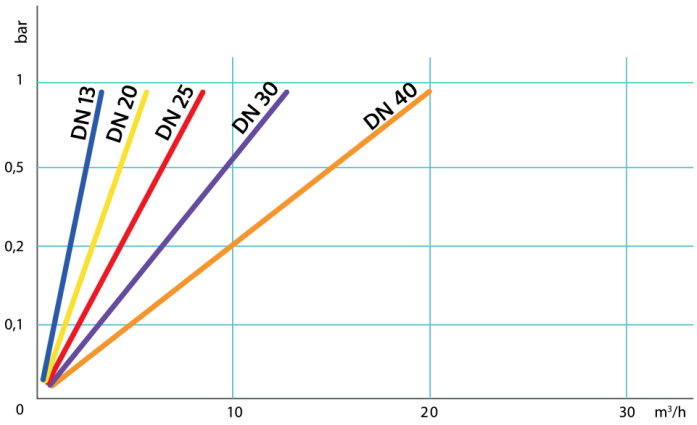

Pressure loss according to flow rate

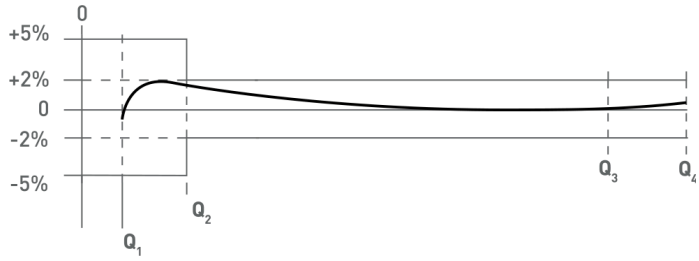

Accuracy curve, from Q1 to Q4

Dimensions

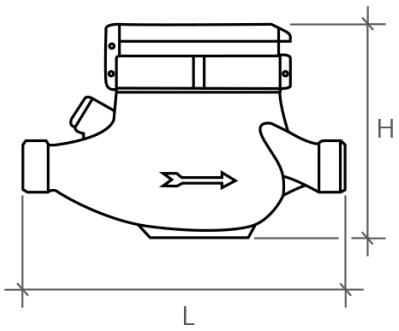

Composite meter: dimensions L and H

Dimensions

DN	Inlet / outlet	Body thread	L (mm)	H (mm)	Coupling length (mm)
13/15	1/2"	3/4"	165	110	80
20	3/4"	1"	190	115	100
25	1"	1" 1/4	260	125	100
30	1" 1/4	1" 1/2	260	125	120

COMPOSITE MULTI-JET WATER METER

W01-WMMJ-FT-002

DN	Inlet / outlet	Body thread	L (mm)	H (mm)	Coupling length (mm)
40	1" 1/2	2"	260	160	140

Related documents : W01-WMMJ-FT-001, D05-AQUADOS-FT-001

Product codes : WMMJ-C-012-ST, WMMJ-C-034-ST, WMMJ-C-100-ST, WMMJ-C-114-ST, WMMJ-C-112-ST, WMMJ-C-012-PE, WMMJ-C-034-PE, WMMJ-C-100-PE, WMMJ-C-114-PE, WMMJ-C-112-PE, WMMJ-C-012-PR, WMMJ-C-034-PR, WMMJ-C-100-PR, WMMJ-C-114-PR, WMMJ-C-112-PR