WOLTMANN WATER METER

W01-WMWT-FT-001

Product data sheet · Water meters

Axial Woltmann water meter for cold drinking water, from DN 50 to DN 500. Rotatable IP68 copper-can register, class R 80, working pressure 16 bar. Pulse output or pulse-ready version.



Technical data

Type	Axial Woltmann turbine meter
Water	Cold drinking water
Register	Rotatable, direct roller reading, copper-can register with mineral glass, IP68
Approval	MID 2014/32/EU (formerly MID 2004/22/EC), modules B + D, or EEC 75/33 with initial verification
Metrological class	R = Q3/Q1 = 80 (other R values on request)
Working pressure	16 bar (PN10 and PN25 on request)
Temperature class	T30/T50
Sizes	DN 50 to DN 500 (2" to 20")

Description

Axial Woltmann turbine water meter, for cold drinking water. The rotatable register gives direct roller reading. It is enclosed in a copper-can housing with a mineral glass window, protection rating IP68. It is prepared to receive a pulse emitter.

The meter is approved under the MID directive 2014/32/EU (formerly MID 2004/22/EC), modules B + D, or under directive EEC 75/33 with initial verification. Its metrological class is R = 80; other R values are available on request.

Two versions are available:

- with pulse output (codes ending in -PE);
- pulse-ready, prepared to receive a pulse output (codes ending in -PR). The pulse output for Woltmann meters is ordered under code WMPE-WT-TG.



Woltmann meter, another view



Exploded view of the Woltmann meter

Product codes

Code	DN	Inlet / outlet
With pulse output		

Code	DN	Inlet / outlet
WMWT-050-PE	50	2"
WMWT-065-PE	65	2" 1/2
WMWT-080-PE	80	3"
WMWT-100-PE	100	4"
WMWT-125-PE	125	5"
WMWT-150-PE	150	6"
WMWT-200-PE	200	8"
WMWT-250-PE	250	10"
WMWT-300-PE	300	12"
WMWT-400-PE	400	16"
WMWT-500-PE	500	20"
Pulse-ready		
WMWT-050-PR	50	2"
WMWT-065-PR	65	2" 1/2
WMWT-080-PR	80	3"
WMWT-100-PR	100	4"
WMWT-125-PR	125	5"
WMWT-150-PR	150	6"
WMWT-200-PR	200	8"
WMWT-250-PR	250	10"
WMWT-300-PR	300	12"
WMWT-400-PR	400	16"
WMWT-500-PR	500	20"

Performance

Metrological performance

DN	Inlet / outlet	Min. flow rate (m^3/h)	Transitional flow rate (m^3/h)	Nominal flow rate (m^3/h)	Max. flow rate (m^3/h)	Minimum reading (L)	Maximum reading (m^3)
50	2"	0.5	0.8	40	50	0.5	999,999
65	2" 1/2	0.788	1.26	63	78.75	0.5	999,999
80	3"	0.788	1.26	63	78.75	0.5	999,999
100	4"	1.25	2	100	125	0.5	999,999
125	5"	2	3.2	160	200	0.5	999,999
150	6"	3.125	5	250	312.5	5	9,999,999
200	8"	5	8	400	500	5	9,999,999
250	10"	7.875	12.6	630	787.5	50	99,999,999
300	12"	12.5	20	1000	1250	50	99,999,999
400	16"	20	32	1600	2000	50	99,999,999
500	20"	31.25	50	2500	3125	50	99,999,999

Q1 = minimum flow rate, Q2 = transitional flow rate, Q3 = permanent flow (“Nominal flow rate” column), Q4 = maximum flow rate.

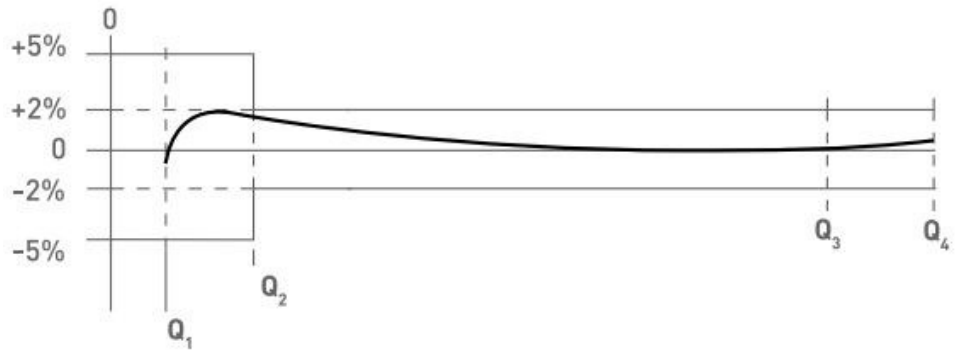

Accuracy curve, from Q1 to Q4

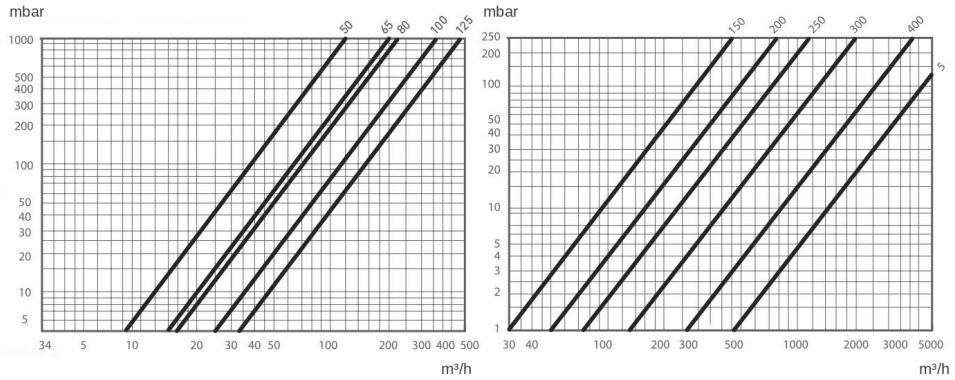

Pressure loss according to flow rate: DN 50 to DN 125 (left), DN 150 and above (right)

Dimensions

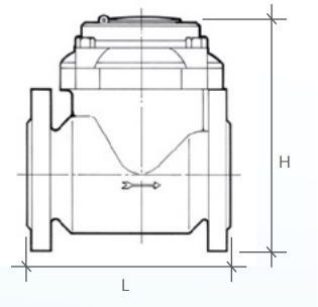

Woltmann meter: dimensions L and H

Dimensions

DN	Inlet / outlet	L (mm)	H (mm)
50	2"	200	252
65	2" 1/2	200	262
80	3"	225	272
100	4"	250	282

WOLTMANN WATER METER

W01-WMWT-FT-001

DN	Inlet / outlet	L (mm)	H (mm)
125	5"	250	297
150	6"	300	341
200	8"	350	371
250	10"	450	480
300	12"	500	516
400	16"	600	647
500	20"	800	785

Related documents : W01-WMTG-FT-001, D05-AQUADOS-FT-001

Product codes : WMWT-050-PE, WMWT-065-PE, WMWT-080-PE, WMWT-100-PE, WMWT-125-PE, WMWT-150-PE, WMWT-200-PE, WMWT-250-PE, WMWT-300-PE, WMWT-400-PE, WMWT-500-PE, WMWT-050-PR, WMWT-065-PR, WMWT-080-PR, WMWT-100-PR, WMWT-125-PR, WMWT-150-PR, WMWT-200-PR, WMWT-250-PR, WMWT-300-PR, WMWT-400-PR, WMWT-500-PR